Technical Information

ARM - Refrigerated Autonomous Retail Merchandiser - XL

Structural Concepts®
DELIVERING FRESH. ALWAYS.™

DIMENSIONS / SHIPPING

Model	L"	L1"	L2"	Est Wt (lbs)
BD3632IS	N/A	45.375	0.000	1,300

ELECTRICAL

Model	System Circuit Volts			Ph	Frq	Rated Load Amps	Min Cir Amps	Max OCP Amps	Watts	Wires	NEMA Plug	Amps Lights	Amps Fans	Amps Anti-Sweats	Amps Misc/Refrig/ Heat
BD3632IS	Self-Contained (R290)	Circuit #1	110-120	1	60	11.51	15	15	477	2+G	5-15P or L5-15P	N/A	0.31	N/A	11.20

REFRIGERATION

Model	Zone	Section	System	Envt	REMOTE REFRIGERATION					GLYCOL / R744 REFRIGERATION			
					SST (°F)	Conv. Rack BTUH	Para. Rack BTUH	Defrost Interval (Hrs)	Defrost Duration	Total GPM	Pressure Drop (psi)	Concent (%)	Liquid Temp (°F)
BD3632IS	All	Main	Self-Contained-R290	Type II	N/A	N/A	N/A	N/A	N/A	N/A	N/A	N/A	N/A

INTENDED ENVIRONMENT

Type II - Designed to operate in ambient conditions of 80°F and 55% relative humidity unless noted otherwise under Envt above.

WARMEST AVERAGE PRODUCT TEMP & INTENDED USE OF ZONES

Zone	Temp (°F)	Intended Use
1	40	Packaged refrigerated products-Prechilled to Warmest Avg Prod Temp.

IMPORTANT NOTES

1) ARM Form required at time of PO for this standalone unit w/ E-Box.
2) Performance issues (product temperatures, water on floor, etc.) caused by adverse conditions are not covered by warranty.
3) Keep unit at least 15' from exterior doors, overhead HVAC vents, or any air curtain disruption.
4) End panels must be tightly joined or kept at least 6" away from any structure to prevent condensation.
5) Do not expose unit to direct sunlight or any heat source (ovens, fryers, etc.).
6) Tile floors, low ceilings, or small rooms will increase noise level.

REGULATORY

All Models	ETL Listed to UL 541 ETL Listed to CAN/CSA 22.2 No. 128 ETL Sanitation to NSF/ANSI 25

Technical Information

ARM - Refrigerated Autonomous Retail Merchandiser - XL

Structural Concepts®
DELIVERING FRESH. ALWAYS.™

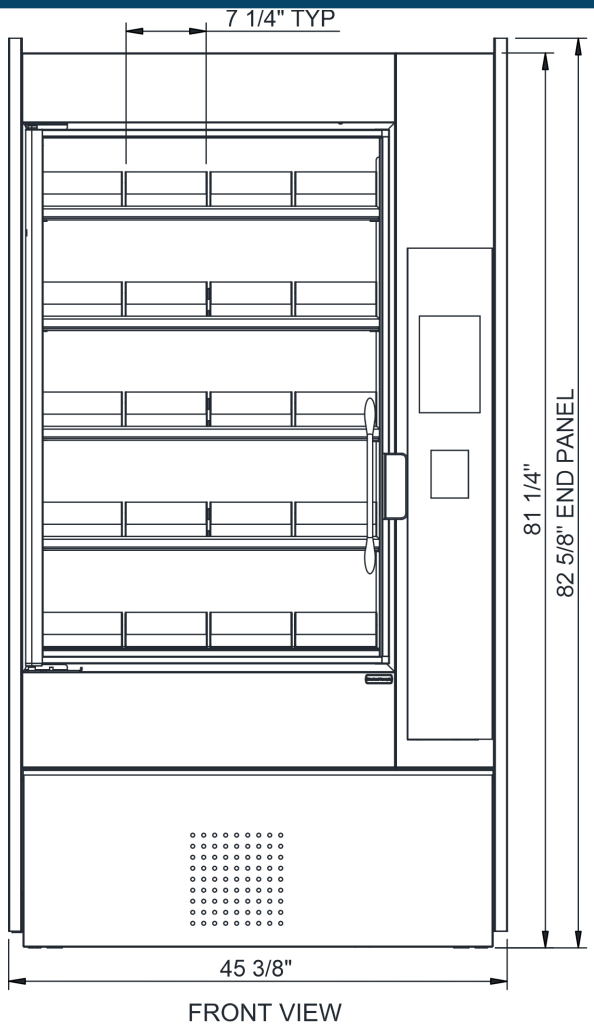

FRONT VIEW

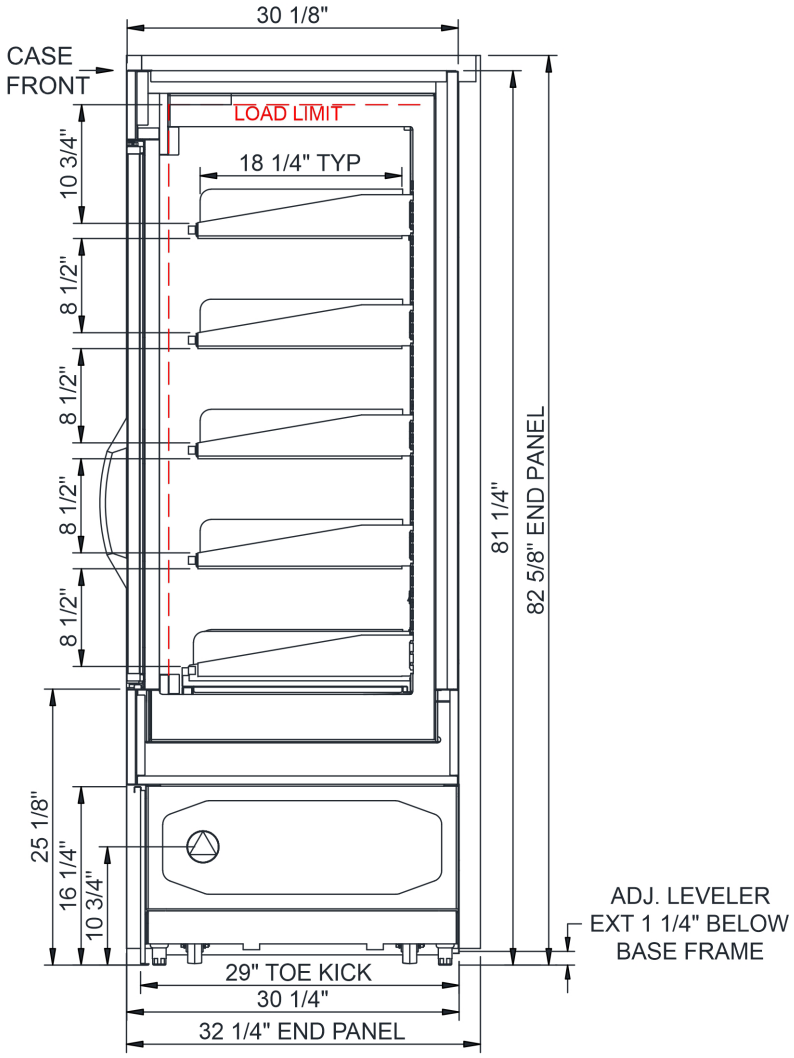

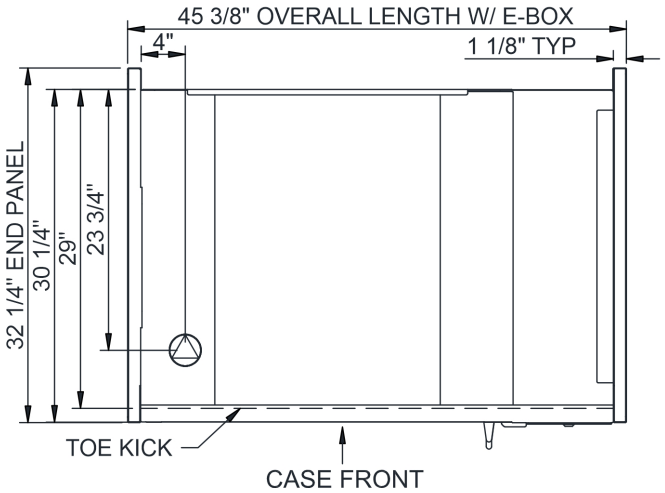

NOTES:

1. SHELF TRAY DIMENSIONS: 7 1/4" W X 18 1/4" D
2. BD3632IS SELF-CONTAINED ACCESS ONLY BY PULLING OUT CONDENSER DRAWER.
3. COMPRESSOR AIR FRONT INTAKE AND LOWER REAR DISCHARGE. LOWER FRONT PANEL CANNOT BE BLOCKED.

NOTE: ALL DIMENSIONS APPROXIMATE

- ELECTRICAL JUNCTION BOX (SUPPLIED WITH 6" LEADS OR POWER CORD).
- LOCATION OF DRAIN TUBE FOR REMOTE REF. ONLY (SUPPLIED WITH $\frac{3}{4}$" OR $1\frac{1}{2}$" PVC TUBE).
- REFRIGERATION LINE CONNECTION.
- REMOTE FLOOR SINK & UTILITIES ACCESS AREA.
- SELF-CONTAINED CASE SERVICE ACCESS AREA.
- DRY CASE SERVICE ACCESS AREA.