Technical Information

Blend - Refrigerated Self-Service Case w/ Rear Ambient Shelving

Structural Concepts®
DELIVERING FRESH. ALWAYS.™

DIMENSIONS / SHIPPING

Model	L"	L1"	L2"	Est Wt (lbs)
NM4852RSSA	N/A	47.750	0.000	N/A

ELECTRICAL

Model	System Circuit Volts			Ph	Frq	Rated Load Amps	Min Cir Amps	Max OCP Amps	Watts	Wires	NEMA Plug	Amps Lights	Amps Fans	Amps Anti-Sweats	Amps Misc/Refrig/ Heat
NM4852RSSA	Self-Contained (R290)	Circuit #1	110-120	1	60	15.65	20	20	1,544	2+G	5-20P or L5-20P	1.12	0.90	4	9.50

REFRIGERATION

Model	Zone	Section	System	Envt	REMOTE REFRIGERATION					GLYCOL / R744 REFRIGERATION			
					SST (°F)	Conv. Rack BTUH	Para. Rack BTUH	Defrost Interval (Hrs)	Defrost Duration	Total GPM	Pressure Drop (psi)	Concent (%)	Liquid Temp (°F)
NM4852RSSA	All	Main	Self-Contained-R290	Type II	N/A	N/A	N/A	N/A	N/A	N/A	N/A	N/A	N/A

INTENDED ENVIRONMENT

Type II - Designed to operate in ambient conditions of 80°F and 55% relative humidity unless noted otherwise under Envt above.

WARMEST AVERAGE PRODUCT TEMP & INTENDED USE OF ZONES

Zone	Temp (°F)	Intended Use
1	40	Packaged refrigerated products-Prechilled to Warmest Avg Prod Temp.

IMPORTANT NOTES

1) ELECTRICAL NOTE: If GFCI is required, a GFCI breaker MUST be used in lieu of a GFCI receptacle
2) Remove tool free front panel to fit through 36"door.
3) Back side of counter must be open or vented the full length of the unit to allow proper ventilation for the refrigeration system.
4) Glass warranty only applicable to first point of delivery.

REGULATORY

All Models	Accordance with AHRI Std 1200 ETL Listed to UL 471 & UL 60335-2-89 ETL Listed to CAN/CSA 22.2 No. 120 ETL Sanitation to NSF/ANSI 7

In Accordance with AHRI Std 1200

Technical Information

Blend - Refrigerated Self-Service Case w/ Rear Ambient Shelving

Structural Concepts®
DELIVERING FRESH. ALWAYS.™

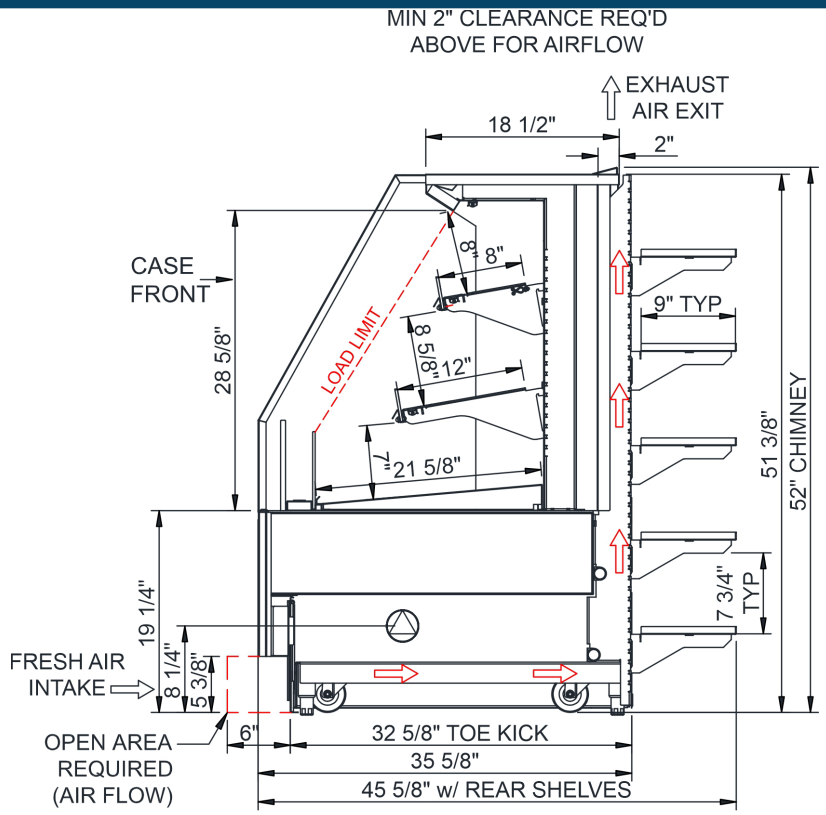

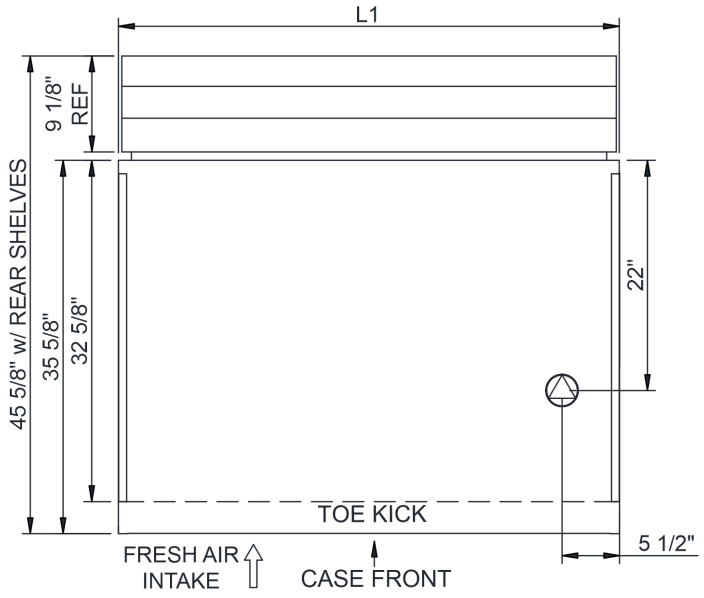

SELF-CONTAINED ACCESS ONLY BY
PULLING OUT CONDESER DRAWER

NOTE: ALL DIMENSIONS APPROXIMATE

ELECTRICAL JUNCTION BOX (SUPPLIED WITH 6" LEADS OR POWER CORD).
LOCATION OF DRAIN TUBE FOR REMOTE REF. ONLY (SUPPLIED WITH $\frac{3}{4}$" OR $1\frac{1}{2}$" PVC TUBE).
REFRIGERATION LINE CONNECTION.
REMOTE FLOOR SINK & UTILITIES ACCESS AREA.
SELF-CONTAINED CASE SERVICE ACCESS AREA.
DRY CASE SERVICE ACCESS AREA.