Technical Information

Fusion - GHSS 52"H Refrigerated Self-Service Case w/ Curved Profile

Structural Concepts®
DELIVERING FRESH. ALWAYS.™

DIMENSIONS / SHIPPING

Model	L"	L1"	L2"	Est Wt (lbs)
GHSS452RLB	48.750	51.000	3.500	550
GHSS552RLB	60.625	62.875	3.500	800
GHSS652RLB	73.125	75.375	3.500	925
GHSS852RLB	97.500	99.750	3.500	1,120
GHSS1052RLB	121.125	123.375	40.250	1,300
GHSS1252RLB	146.250	148.500	45.125	1,500

ELECTRICAL

Model	System Circuit Volts			Ph	Frq	Rated Load Amps	Min Cir Amps	Max OCP Amps	Watts	Wires	NEMA Plug	Amps Lights	Amps Fans	Amps Anti-Sweats	Amps Misc/Refrig/ Heat
GHSS452RLB	Remote (DX)	Circuit #1	110-120	1	60	1.50	15	15	99	2+G	Leads Multiple	0.70	0.62	0.18	N/A
	Remote (GLYCOL)	Circuit #1	110-120	1	60	1.78	15	15	82	2+G	Leads Multiple	0.70	0.90	0.18	N/A
GHSS552RLB	Remote (DX)	Circuit #1	110-120	1	60	2.88	15	15	158	2+G	Leads Multiple	1.40	1.24	0.24	N/A
GHSS652RLB	Remote (DX)	Circuit #1	110-120	1	60	2.62	15	15	154	2+G	Leads Multiple	1.40	0.93	0.29	N/A
	Remote (GLYCOL)	Circuit #1	110-120	1	60	3.04	15	15	218	2+G	Leads Multiple	1.40	1.35	0.29	N/A
GHSS852RLB	Remote (DX)	Circuit #1	110-120	1	60	3.56	15	15	199	2+G	Leads Multiple	1.40	1.80	0.36	N/A
	Remote (GLYCOL)	Circuit #1	110-120	1	60	3.56	15	15	199	2+G	Leads Multiple	1.40	1.80	0.36	N/A
GHSS1052RLB	Remote (DX)	Circuit #1	110-120	1	60	3.81	15	15	231	2+G	Leads Multiple	2.10	1.24	0.47	N/A
GHSS1252RLB	Remote (DX)	Circuit #1	110-120	1	60	4.51	15	15	354	2+G	Leads Multiple	2.10	1.86	0.55	N/A
	Remote (GLYCOL)-Type I Env	Circuit #1	110-120	1	60	5.35	15	15	299	2+G	Leads Multiple	2.10	2.70	0.55	N/A

REFRIGERATION

Model	Zone	Section	System	Envt	REMOTE REFRIGERATION					GLYCOL / R744 REFRIGERATION			
					SST (°F)	Conv. Rack BTUH	Para. Rack BTUH	Defrost Interval (Hrs)	Defrost Duration	Total GPM	Pressure Drop (psi)	Concent (%)	Liquid Temp (°F)
GHSS452RLB	All	Main	Remote-DX	Type I	20	4,510	4,176	4.00	30.00	N/A	N/A	N/A	N/A
	All	Main	Remote-Glycol	Type I	N/A	4,510	4,176	4.00	30.00	1.50	2.85	35%	20.00
GHSS552RLB	All	Main	Remote-DX	Type I	20	5,495	5,088	4.00	30.00	N/A	N/A	N/A	N/A
GHSS652RLB	All	Main	Remote-DX	Type I	20	6,480	6,000	4.00	30.00	N/A	N/A	N/A	N/A
	All	Main	Remote-Glycol	Type I	N/A	6,480	6,000	4.00	30.00	1.50	3.65	35%	20.00
GHSS852RLB	All	Main	Remote-DX	Type I	20	8,450	7,824	4.00	30.00	N/A	N/A	N/A	N/A
	All	Main	Remote-Glycol	Type I	N/A	8,450	7,824	4.00	45.00	3.00	2.85	35%	20.00
GHSS1052RLB	All	Main	Remote-DX	Type I	20	10,757	9,960	4.00	30.00	N/A	N/A	N/A	N/A
GHSS1252RLB	All	Main	Remote-DX	Type I	20	12,960	12,000	4.00	30.00	N/A	N/A	N/A	N/A
	All	Main	Remote-Glycol-Type I Env	Type I	N/A	12,960	12,000	4.00	30.00	4.50	2.85	35%	20.00

INTENDED ENVIRONMENT

Type I - Designed to operate in ambient conditions of 75°F with 55% relative humidity unless noted otherwise under Envt above.

WARMEST AVERAGE PRODUCT TEMP & INTENDED USE OF ZONES

Zone	Temp (°F)	Intended Use
1	40	Packaged refrigerated products-Prechilled to Warmest Avg Prod Temp.

IMPORTANT NOTES

1) REMOTE REFRIGERATION NOTE: Condensing unit not included, floor drain required.
2) ELECTRICAL NOTE: If GFCI is required, a GFCI breaker MUST be used in lieu of a GFCI receptacle.
3) 45" minimum door entry clearance required (without shipping skid).
4) Units must be shimmed during installation to ensure the unit is level and plumb.

REGULATORY

All Models	Accordance with AHRI Std 1200 ETL Listed to UL 471 ETL Listed to CAN/CSA 22.2 No. 120 ETL Sanitation to NSF/ANSI 7

In Accordance with AHRI Std 1200

Technical Information

Fusion - GHSS 52"H Refrigerated Self-Service Case w/ Curved Profile

Structural Concepts®
DELIVERING FRESH. ALWAYS.™

STANDARD HEADER

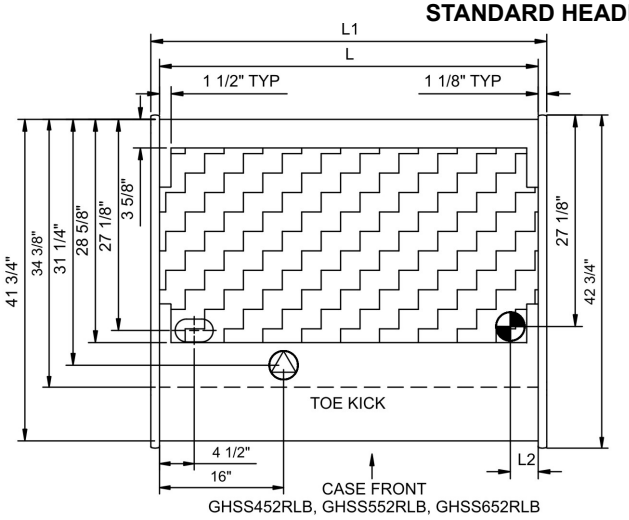

GHSS452RLB, GHSS552RLB, GHSS652RLB

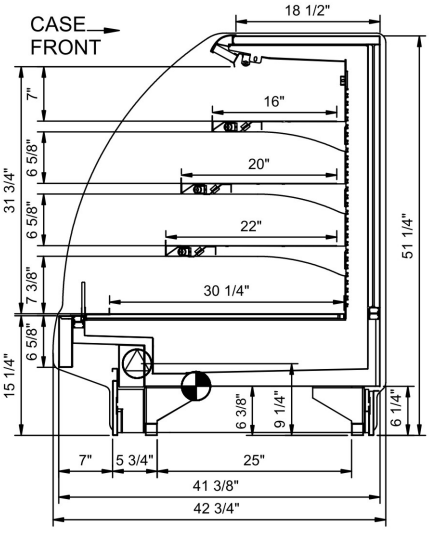

CURVED PROFILE

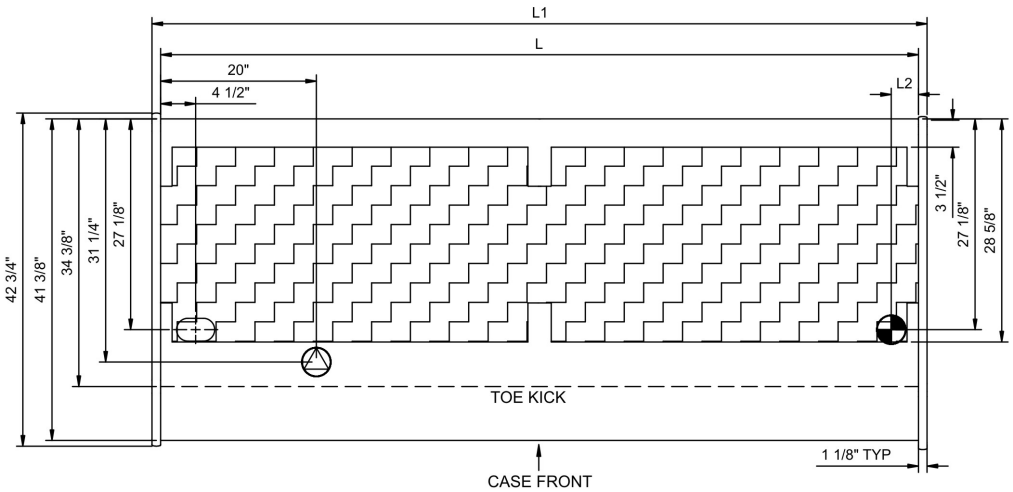

GHSS852RLB

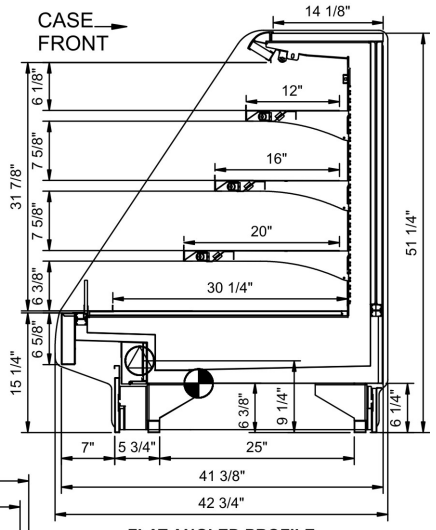

FLAT ANGLED PROFILE

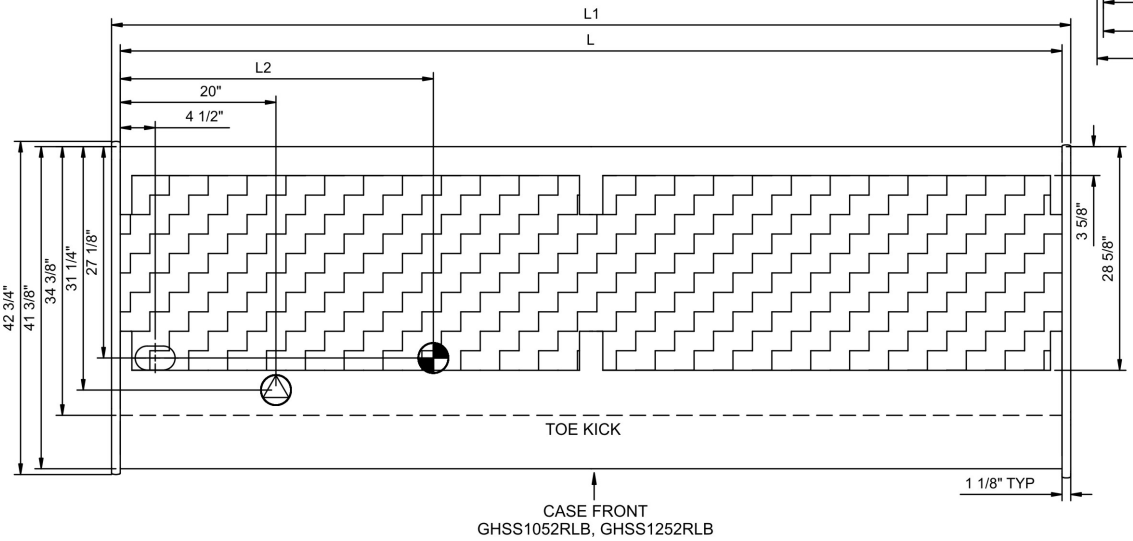

GHSS1052RLB, GHSS1252RLB

NOTE: ALL DIMENSIONS APPROXIMATE

- ELECTRICAL JUNCTION BOX (SUPPLIED WITH 6" LEADS OR POWER CORD).
- LOCATION OF DRAIN TUBE FOR REMOTE REF. ONLY (SUPPLIED WITH $\frac{3}{4}$" OR $1\frac{1}{2}$" PVC TUBE).
- REFRIGERATION LINE CONNECTION.
- REMOTE FLOOR SINK & UTILITIES ACCESS AREA.
- SELF-CONTAINED CASE SERVICE ACCESS AREA.
- DRY CASE SERVICE ACCESS AREA.