Technical Information

Fusion - GP Combination Prep Case

Structural Concepts®
DELIVERING FRESH. ALWAYS.™

DIMENSIONS / SHIPPING

Model	L"	L1"	L2"	Est Wt (lbs)
GP441RRLB	48.750	51.000	3.500	700
GP541RRLB	60.625	62.875	3.500	1,000
GP641RRLB	73.125	75.375	3.500	1,375
GP841RRLB	97.500	99.750	3.500	1,400
GP1041RRLB	121.000	123.250	40.500	2,000

ELECTRICAL

Model	System Circuit Volts			Ph	Frq	Rated Load Amps	Min Cir Amps	Max OCP Amps	Watts	Wires	NEMA Plug	Amps Lights	Amps Fans	Amps Anti-Sweats	Amps Misc/Refrig/ Heat
GP441RRLB	Remote (R404A)	Circuit #1	110-120	1	60	3.27	15	15	266	2+G	Leads Multiple	1.27	1.40	0.60	N/A
	Remote (GLYCOL)	Circuit #1	110-120	1	60	3.27	15	15	266	2+G	Leads Multiple	1.27	1.40	0.60	N/A
GP541RRLB	Remote (GLYCOL)-Type I Env	Circuit #1	110-120	1	60	4.47	15	15	303	2+G	Leads Single	1.98	1.70	0.79	N/A
	Remote (DX)-Type I Env	Circuit #1	110-120	1	60	5.27	15	15	308	2+G	Leads Multiple	1.98	2.50	0.79	N/A
GP641RRLB	Remote (DX)	Circuit #1	110-120	1	60	4.06	15	15	209	2+G	Leads Multiple	0.70	2.50	0.86	N/A
	Remote (R744 T)	Circuit #1	110-120	1	60	4.76	15	15	209	2+G	Leads Multiple	0.70	3.20	0.86	N/A
	Remote (GLYCOL)	Circuit #1	110-120	1	60	4.14	15	15	414	2+G	Leads Multiple	0.70	0.93	0.86	1.65
GP841RRLB	Remote (DX)	Circuit #1	110-120	1	60	5.86	15	15	656	2+G	Leads Multiple	2.51	1.90	1.45	N/A
	Remote (GLYCOL)	Circuit #1	110-120	1	60	5.86	15	15	656	2+G	Leads Multiple	2.51	1.90	1.45	N/A
GP1041RRLB	Remote (DX)-Type I Env	Circuit #1	110-120	1	60	7.97	15	15	367	2+G	Leads Multiple	1.40	5.00	1.57	N/A

REFRIGERATION

Model	Zone	Section	System	Envt	REMOTE REFRIGERATION					GLYCOL / R744 REFRIGERATION			
					SST (°F)	Conv. Rack BTUH	Para. Rack BTUH	Defrost Interval (Hrs)	Defrost Duration	Total GPM	Pressure Drop (psi)	Concent (%)	Liquid Temp (°F)
GP441RRLB	All	Main	Remote-R404A	Type I	20	5,184	4,800	4.00	25.00	N/A	N/A	N/A	N/A
	All	Main	Remote-Glycol	Type I	N/A	5,184	4,800	4.00	30.00	1.50	3.25	35%	20.00
GP541RRLB	All	Main	Remote-Glycol-Type I Env	Type I	N/A	6,091	5,640	4.00	40.00	1.50	2.18	35%	20.00
	All	Refrigerator	Remote-DX-Type I Env	Type I	20	6,091	5,640	4.00	30.00	N/A	N/A	N/A	N/A
GP641RRLB	All	Main	Remote-DX	Type I	20	7,603	7,040	4.00	25.00	N/A	N/A	N/A	N/A
	All	Main	Remote-R744 TRANSCRITICAL	Type I	20	7,603	7,040	4.00	25.00	N/A	N/A	N/A	N/A
	All	Main	Remote-Glycol	Type I	N/A	7,603	7,040	4.00	30.00	1.75	3.90	35%	20.00
GP841RRLB	All	Main	Remote-DX	Type I	20	10,109	9,360	6.00	30.00	N/A	N/A	N/A	N/A
	All	Main	Remote-Glycol	Type I	N/A	10,109	9,360	4.00	30.00	2.50	10.50	35%	20.00
GP1041RRLB	All	Refrigerator	Remote-DX-Type I Env	Type I	20	9,504	8,800	4.00	30.00	N/A	N/A	N/A	N/A

INTENDED ENVIRONMENT

Type I - Designed to operate in ambient conditions of 75°F with 55% relative humidity unless noted otherwise under Envt above.

WARMEST AVERAGE PRODUCT TEMP & INTENDED USE OF ZONES

Zone	Temp (°F)	Intended Use
1	40	Packaged / unpackaged refrigerated products-Prechilled to Warmest Avg Prod Temp.

IMPORTANT NOTES

1) REMOTE REFRIGERATION NOTE: Condensing unit not included, floor drain required.
2) ELECTRICAL NOTE: If GFCI is required, a GFCI breaker MUST be used in lieu of a GFCI receptacle.
3) 55" minimum door entry clearance required (without shipping skid).
4) Units must be shimmed during installation to ensure unit is level and plumb.
5) Pans are not supplied with unit.

REGULATORY

All Models	Accordance with AHRI Std 1200 ETL Listed to UL 471 ETL Listed to CAN/CSA 22.2 No. 120 ETL Sanitation to NSF/ANSI 7

In Accordance with AHRI Std 1200

Technical Information

Fusion - GP Combination Prep Case

Structural Concepts®
DELIVERING FRESH. ALWAYS.™

GP'41 MODEL

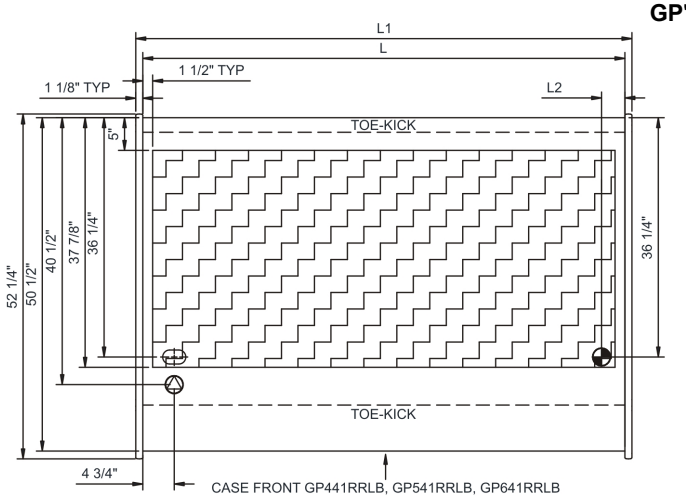

CASE FRONT GP441RRLB, GP541RRLB, GP641RRLB

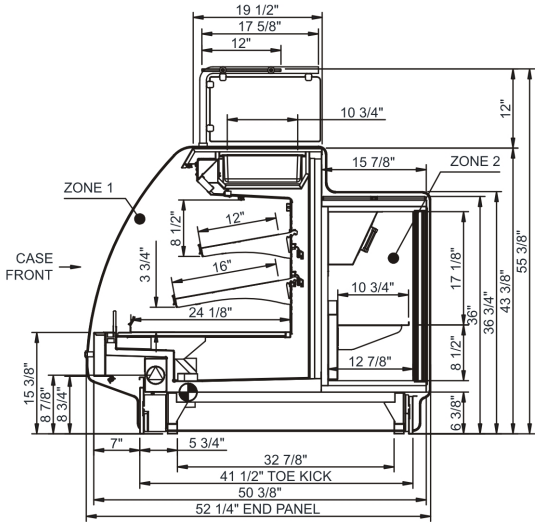

STANDARD SNEEZE GUARD WITH POSTS

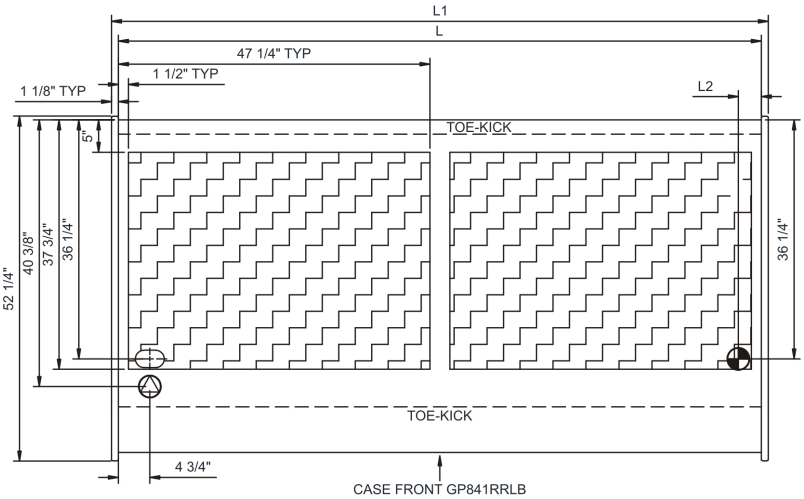

CASE FRONT GP841RRLB

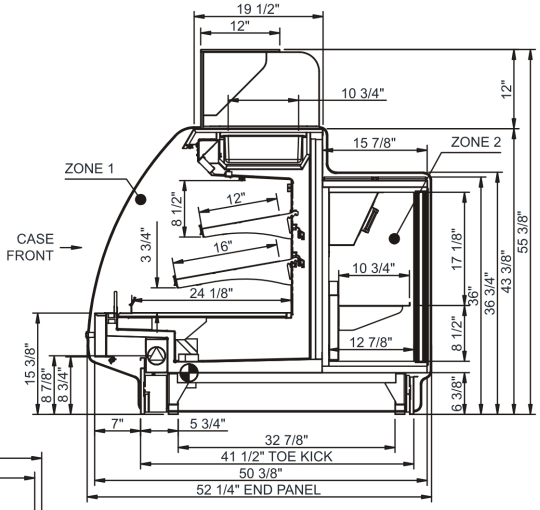

UV BONDED SNEEZE GUARD

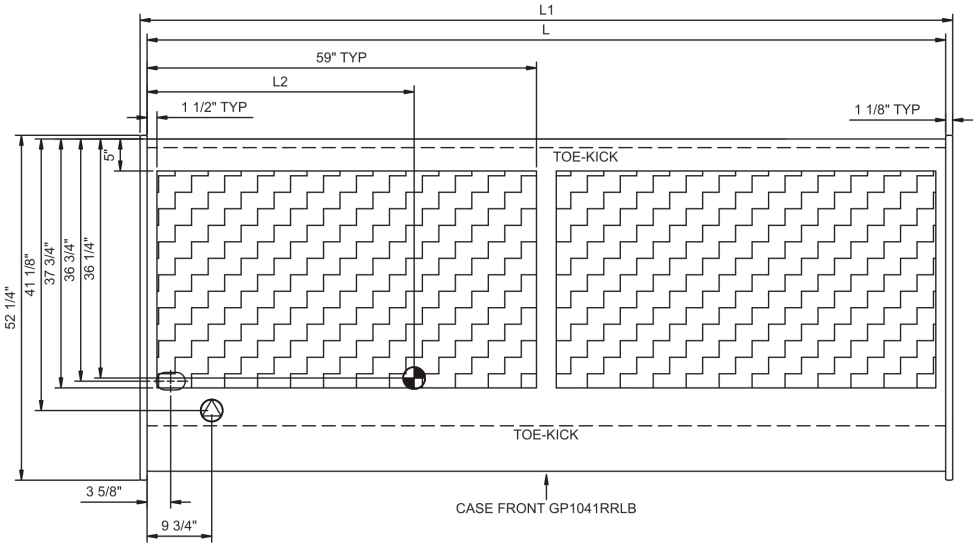

CASE FRONT GP1041RRLB

NOTE: ALL DIMENSIONS APPROXIMATE

- ELECTRICAL JUNCTION BOX (SUPPLIED WITH 6" LEADS OR POWER CORD).
- LOCATION OF DRAIN TUBE FOR REMOTE REF. ONLY (SUPPLIED WITH $\frac{3}{4}$" OR 1$\frac{1}{2}$" PVC TUBE).
- REFRIGERATION LINE CONNECTION.
- REMOTE FLOOR SINK & UTILITIES ACCESS AREA.
- SELF-CONTAINED CASE SERVICE ACCESS AREA.
- DRY CASE SERVICE ACCESS AREA.