Technical Information

Fusion - Self-Service Doored Reach-In Front - 78"H

Structural Concepts®
DELIVERING FRESH. ALWAYS.™

DIMENSIONS / SHIPPING

Model	L"	L1"	L2"	Est Wt (lbs)
MD478DR	48.000	50.250	3.000	1,100
MD678DR	72.000	74.250	3.000	1,450

ELECTRICAL

Model	System Circuit Volts			Ph	Frq	Rated Load Amps	Min Cir Amps	Max OCP Amps	Watts	Wires	NEMA Plug	Amps Lights	Amps Fans	Amps Anti-Sweats	Amps Misc/Refrig/ Heat
MD478DR	Remote (DX)	Circuit #1	110-120	1	60	2.00	15	15	94	2+G	Leads Multiple	1.40	1		N/A
MD678DR	Remote (DX)	Circuit #1	110-120	1	60	2.00	15	15	127	2+G	Leads Multiple	1.40	1		N/A

REFRIGERATION

Model	Zone	Section	System	Envt	REMOTE REFRIGERATION					GLYCOL / R744 REFRIGERATION			
					SST (°F)	Conv. Rack BTUH	Para. Rack BTUH	Defrost Interval (Hrs)	Defrost Duration	Total GPM	Pressure Drop (psi)	Concent (%)	Liquid Temp (°F)
MD478DR	All	Main	Remote-DX	Type I	26	1,469	1,360	4.00	30.00	N/A	N/A	N/A	N/A
MD678DR	All	Main	Remote-DX	Type I	28	2,246	2,080	4.00	25.00	N/A	N/A	N/A	N/A

INTENDED ENVIRONMENT

Type I - Designed to operate in ambient conditions of 75°F with 55% relative humidity unless noted otherwise under Envt above.

WARMEST AVERAGE PRODUCT TEMP & INTENDED USE OF ZONES

Zone	Temp (°F)	Intended Use
1	40	Packaged / unpackaged refrigerated products-Prechilled to Warmest Avg Prod Temp.

IMPORTANT NOTES

1) REMOTE REFRIGERATION NOTE: Condensing unit not included, floor drain required.
2) Units must be shimmed during installation to ensure the unit is level and plumb.

REGULATORY

All Models	Accordance with AHRI Std 1200 ETL Listed to UL 471 ETL Listed to CAN/CSA 22.2 No. 120 ETL Sanitation to NSF/ANSI 7

In Accordance with AHRI Std 1200

Technical Information

Fusion - Self-Service Doored Reach-In Front - 78"H

Structural Concepts®
DELIVERING FRESH. ALWAYS.™

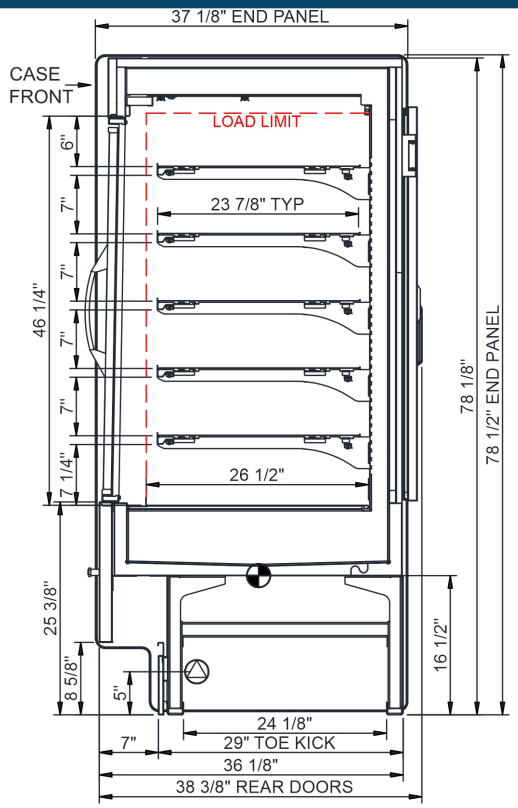

REAR DOORS LOADING SPACE	
MODEL	WD x HT x QTY
MD478DR	17" x 47 3/4" x 2
MD678DR	27 1/8" x 47 3/4" x 2

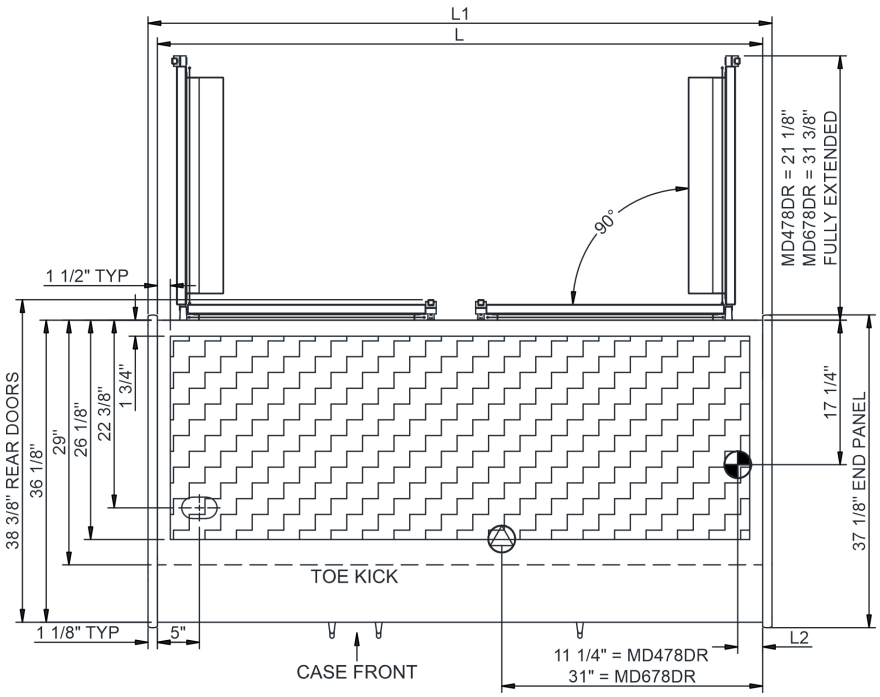

NOTE: ALL DIMENSIONS APPROXIMATE

- ELECTRICAL JUNCTION BOX (SUPPLIED WITH 6" LEADS OR POWER CORD).
- LOCATION OF DRAIN TUBE FOR REMOTE REF. ONLY (SUPPLIED WITH $\frac{3}{4}$" OR $1\frac{1}{2}$" PVC TUBE).
- REFRIGERATION LINE CONNECTION.
- REMOTE FLOOR SINK & UTILITIES ACCESS AREA.
- SELF-CONTAINED CASE SERVICE ACCESS AREA.
- DRY CASE SERVICE ACCESS AREA.