Technical Information

Oasis - Refrigerated Self-Service Counter Height Case 24-3/4"D

Structural Concepts®
DELIVERING FRESH. ALWAYS.™

DIMENSIONS / SHIPPING

Model	L"	L1"	L2"	Est Wt (lbs)
CN33R-CH	33.125	35.625	0.000	500
CN43R-CH	45.125	47.625	0.000	600
CN53R-CH	57.125	59.625	0.000	700

ELECTRICAL

Model	System Circuit Volts			Ph	Frq	Rated Load Amps	Min Cir Amps	Max OCP Amps	Watts	Wires	NEMA Plug	Amps Lights	Amps Fans	Amps Anti-Sweats	Amps Misc/Refrig/ Heat
CN33R-CH	Self-Contained (R290)	Circuit #1	110-120	1	60	10.85	15	15	963	2+G	5-15P or L5-15P	1.12	0.45	4.08	5.20
CN43R-CH	Self-Contained (R290)	Circuit #1	110-120	1	60	11.35	15	15	991	2+G	5-15P or L5-15P	1.12	0.90	4.13	5.20
CN53R-CH	Self-Contained (R290)	Circuit #1	110-120	1	60	15.70	20	20	1,527	2+G	5-20P or L5-20P	1.12	0.90	4.18	9.50

REFRIGERATION

Model	Zone	Section	System	Envt	REMOTE REFRIGERATION					GLYCOL / R744 REFRIGERATION			
					SST (°F)	Conv. Rack BTUH	Para. Rack BTUH	Defrost Interval (Hrs)	Defrost Duration	Total GPM	Pressure Drop (psi)	Concent (%)	Liquid Temp (°F)
CN33R-CH	All	Refrigerator	Self-Contained-R290	Type II	N/A	N/A	N/A	N/A	N/A	N/A	N/A	N/A	N/A
CN43R-CH	All	Refrigerator	Self-Contained-R290	Type II	N/A	N/A	N/A	N/A	N/A	N/A	N/A	N/A	N/A
CN53R-CH	All	Refrigerator	Self-Contained-R290	Type II	N/A	N/A	N/A	N/A	N/A	N/A	N/A	N/A	N/A

INTENDED ENVIRONMENT

Type II - Designed to operate in ambient conditions of 80°F and 55% relative humidity unless noted otherwise under Envt above.

WARMEST AVERAGE PRODUCT TEMP & INTENDED USE OF ZONES

Zone	Temp (°F)	Intended Use
1	40	Packaged refrigerated products-Prechilled to Warmest Avg Prod Temp.

IMPORTANT NOTES

1) Performance issues (product temperatures, water on floor, etc.) caused by adverse conditions are not covered by warranty.
2) Levelers must be adjusted during installation to ensure unit is level and plumb.
3) Keep unit at least 15' from exterior doors, overhead HVAC vents, or any air curtain disruption.
4) Do not expose unit to direct sunlight or any heat source (ovens, fryers, etc.).
5) Front access compressor air intake at lower front, discharge from lower rear. Lower panels cannot be blocked. Wall spacers required for proper air flow. Rear access reverses air flow direction.
6) Front access increases case depth to 26-1/4".
7) If GFCI is required, a GFCI breaker MUST be used in lieu of a GFCI receptacle.

REGULATORY

All Models	Accordance with AHRI Std 1200 ETL Listed to UL 471 & UL 60335-2-89 ETL Listed to CAN/CSA 22.2 No. 120 ETL Sanitation to NSF/ANSI 7

In Accordance with AHRI Std 1200

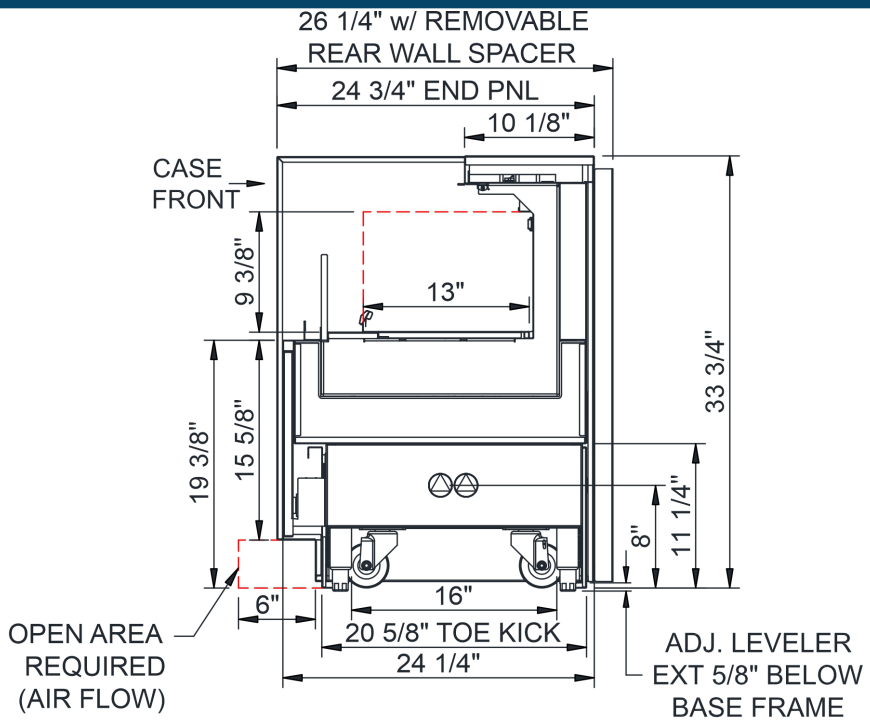

NOTES:

1. SELF-CONTAINED ACCESS ONLY BY PULLING OUT CONDENSER DRAWER
2. COMPRESSOR REAR INTAKE, FRONT DISCHARGE AT TOE KICK. REAR & FRONT PANELS CANNOT BE BLOCKED. (INTAKE/DISCHARGE REVERSED WHEN FRONT ACCESS)
3. REAR SPACERS REQUIRED WITH FRONT ACCESS REFRIGERATION

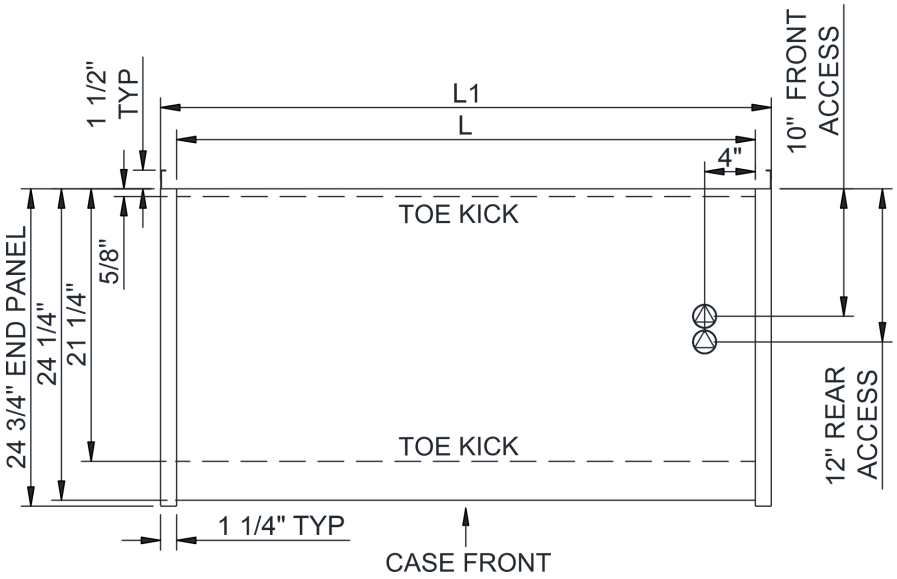

NOTE: ALL DIMENSIONS APPROXIMATE

ELECTRICAL JUNCTION BOX (SUPPLIED WITH 6" LEADS OR POWER CORD).
LOCATION OF DRAIN TUBE FOR REMOTE REF. ONLY (SUPPLIED WITH $\frac{3}{4}$" OR $1\frac{1}{2}$" PVC TUBE).
REFRIGERATION LINE CONNECTION.
REMOTE FLOOR SINK & UTILITIES ACCESS AREA.
SELF-CONTAINED CASE SERVICE ACCESS AREA.
DRY CASE SERVICE ACCESS AREA.