Technical Information

Reveal® - Refrigerated Service Case

Structural Concepts®
DELIVERING FRESH. ALWAYS.™

DIMENSIONS / SHIPPING

Model	L"	L1"	L2"	Est Wt (lbs)
NR3633RSV	N/A	35.750	7.500	600
NR4833RSV	N/A	47.750	7.500	750

ELECTRICAL

Model	System Circuit Volts			Ph	Frq	Rated Load Amps	Min Cir Amps	Max OCP Amps	Watts	Wires	NEMA Plug	Amps Lights	Amps Fans	Amps Anti-Sweats	Amps Misc/Refrig/ Heat
NR3633RSV	Remote (DX)	Circuit #1	110-120	1	60	0.78	15	15	14	2+G	Leads Single	0.70			0.08
	Remote (DX)	Circuit #1	110-120	1	60	0.78	15	15	14	2+G	Leads Single	0.70			0.08
	Self-Contained (R290)	Circuit #1	110-120	1	60	10.73	15	15	948	2+G	5-15P or L5-15P	1.12	0.45	3.96	5.20
	Self-Contained (R290)	Circuit #1	110-120	1	60	10.73	15	15	948	2+G	5-15P or L5-15P	N/A	0.45	3.96	6.32
NR4833RSV	Remote (DX)	Circuit #1	110-120	1	60	1.08	15	15	29	2+G	Leads Single	0.70	0.30		0.08
	Remote (DX)	Circuit #1	110-120	1	60	1.08	15	15	29	2+G	Leads Single	0.70	0.30		0.08
	Self-Contained (R290)	Circuit #1	110-120	1	60	11.18	15	15	971	2+G	5-15P or L5-15P	N/A	0.90	3.96	6.32

REFRIGERATION

Model	Zone	Section	System	Envt	REMOTE REFRIGERATION					GLYCOL / R744 REFRIGERATION			
					SST (°F)	Conv. Rack BTUH	Para. Rack BTUH	Defrost Interval (Hrs)	Defrost Duration	Total GPM	Pressure Drop (psi)	Concent (%)	Liquid Temp (°F)
NR3633RSV	All	Refrigerator	Remote-DX	Type II	20	713	660	4.00	30.00	N/A	N/A	N/A	N/A
	All	Refrigerator	Remote-DX	Type I	20	626	580	4.00	30.00	N/A	N/A	N/A	N/A
	All	Refrigerator	Self-Contained-R290	Type II	N/A	N/A	N/A	N/A	N/A	N/A	N/A	N/A	N/A
NR4833RSV	All	Refrigerator	Remote-DX	Type II	20	929	860	4.00	30.00	N/A	N/A	N/A	N/A
	All	Refrigerator	Remote-DX	Type I	20	821	760	4.00	30.00	N/A	N/A	N/A	N/A
	All	Main	Self-Contained-R290	Type II	N/A	N/A	N/A	N/A	N/A	N/A	N/A	N/A	N/A

INTENDED ENVIRONMENT

Type II - Designed to operate in ambient conditions of 80°F and 55% relative humidity unless noted otherwise under Envt above.

WARMEST AVERAGE PRODUCT TEMP & INTENDED USE OF ZONES

Zone	Temp (°F)	Intended Use
1	40	Unpackaged refrigerated products-Prechilled to Warmest Avg Prod Temp.

IMPORTANT NOTES

1) REMOTE REFRIGERATION NOTE: Condensing unit not included, floor drain required.
2) ELECTRICAL NOTE: If GFCI is required, a GFCI breaker MUST be used in lieu of a GFCI receptacle
3) Back side of counter must be open or vented the full length of the unit to allow proper ventilation for the refrigeration system.
4) Glass warranty only applicable to first point of delivery.

REGULATORY

All Models	Accordance with AHRI Std 1200 ETL Listed to UL 471 ETL Listed to CAN/CSA 22.2 No. 120 ETL Sanitation to NSF/ANSI 7

In Accordance with AHRI Std 1200

Technical Information

Reveal® - Refrigerated Service Case

Structural Concepts®
DELIVERING FRESH. ALWAYS.™

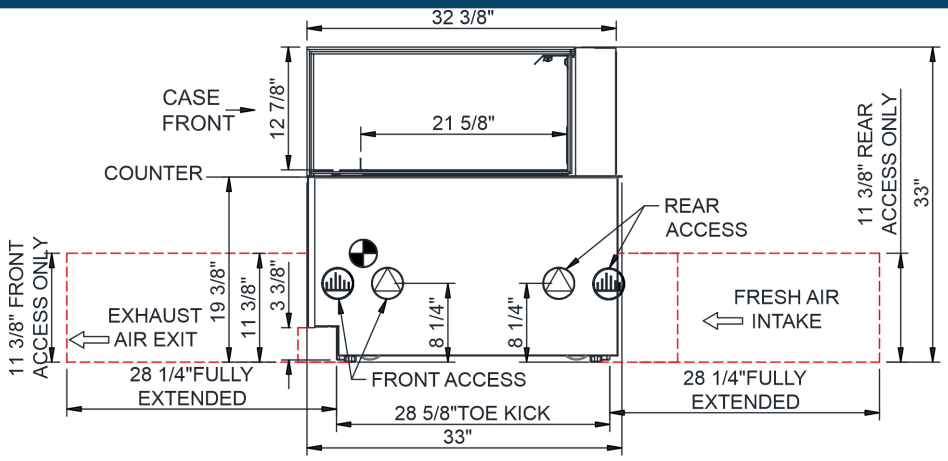

NOTES:
1. 11 3/8" TALL, FULL WIDTH OF CASE OPENING IN CABINET OR COUNTER IS REQUIRED TO PULL OUT REFRIGERATION SYSTEM.
2. BACK OF COUNTER / CABINET MUST BE VENTED PROPERLY FOR ADEQUATE AIRFLOW TO CONDENSER.
3. **REPRESENTS REAR PULLOUT REFRIGERATION. AIR FLOW INTAKE AND EXIT DETAILS ARE REVERSED WITH FRONT PULLOUT REFRIGERATION OPTION.
4. SELF-CONTAINED ACCESS ONLY BY PULLING OUT CONDENSER UNIT.
5. 4" OPEN AREA CLEARANCE REQUIRED FOR AIR FLOW FRONT AND REAR OF CASE.

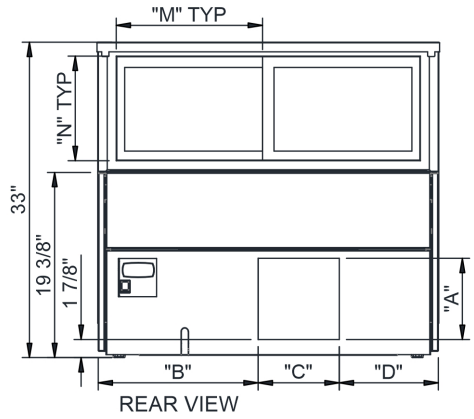

	"A"	"B"	"C"	"D"
NR3633RSV	8 1/2"	16 3/4"	8 1/2"	10 3/8"
NR4833RSV	8 1/2"	28 3/4"	8 1/2"	10 3/8"

	"M"	"N"
NR3633RSV	15 3/8"	11"
NR4833RSV	21 3/8"	11"

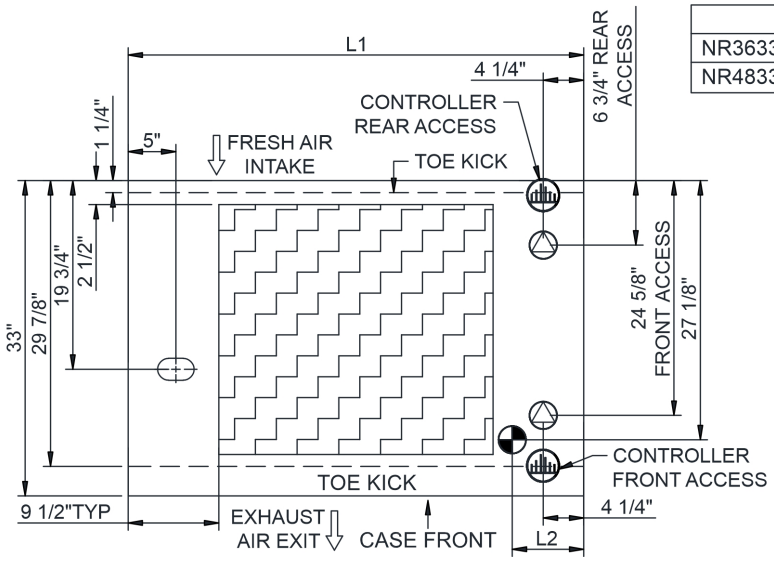

NOTE: ALL DIMENSIONS APPROXIMATE

- ELECTRICAL JUNCTION BOX (SUPPLIED WITH 6" LEADS OR POWER CORD).
- LOCATION OF DRAIN TUBE FOR REMOTE REF. ONLY (SUPPLIED WITH $\frac{3}{4}$" OR 1$\frac{1}{2}$" PVC TUBE).
- REFRIGERATION LINE CONNECTION.
- REMOTE FLOOR SINK & UTILITIES ACCESS AREA.
- SELF-CONTAINED CASE SERVICE ACCESS AREA.
- DRY CASE SERVICE ACCESS AREA.