Oasis

Refrigerated Self-Service Multi-Purpose Island - 3' Case Depth

Structural Concepts®
DELIVERING FRESH. ALWAYS.™

- **MI33R** 38-1/8"L x 36-1/2"D x 39-1/8"H
- **MI36R** 74-1/8"L x 36-1/2"D x 39-1/8"H



MI33R

Included

- Breeze self-contained refrigeration
- Casters (locking)
- Corrosion resistant stainless steel tub & fan shroud
- One year parts & labor; 5 year compressor warranty
- Solid metal deck
- Straight insulated glass ends
- Warmest average product temperature adjustable from 38°F to 40°F

Specify	Standard Features	Additional Options
EXTERIOR COLOR	• Powder coated Silversan Black	• Laminate (non-stock colors) • Laminate (stock colors) • Powder coated (stock colors, specify RAL#) • Stainless steel
INTERIOR COLOR	• Powder coated Silversan Black	• Stainless steel
LOWER PANEL COLOR	• Powder coated Silversan Black	• Stainless steel (must choose stainless exterior)
BASE SUPPORT	• Enclosed base with locking casters	
BUMPER	• 1" bumper, double strip (black)	
ELECTRICAL CONNECTION	• 6' 90° Straight blade power cord (self-cont.)	• 6' Locking power cord (self-cont.)
CLEAN SWEEP	• None	• Clean Sweep® automatic condenser coil cleaner (2 year parts & labor warranty included)
REFRIGERATION	• Breeze self-contained refrigeration	
MISCELLANEOUS		• Second year parts & labor warranty (excludes compressor)
ACCESSORIES		• Electrical drop cord cover (matches exterior color)

Oasis

Refrigerated Self-Service Multi-Purpose Island - 3' Case Depth

Structural Concepts®
DELIVERING FRESH. ALWAYS.™

Intended Environment:	Type I - Designed to operate in ambient conditions of 75°F with 55% relative humidity unless noted otherwise in system information below.	
Zone	**Intended Product To Be Displayed**	**Warmest Avg Prod Temp ° F**
1	Packaged raw meat (38°) Packaged produce/deli (40°)-Prechilled to Warmest Avg Prod Temp.	38-40

PLAN VIEW

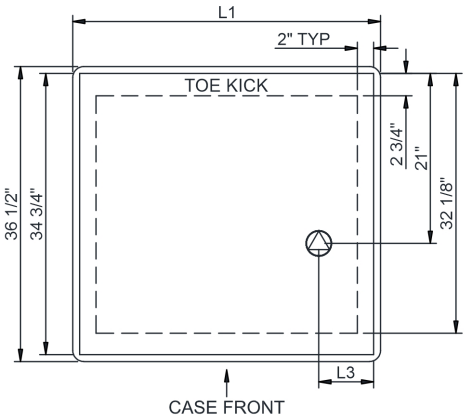

	"L3"
MI33R	6 5/8"
MI36R	8 3/8"

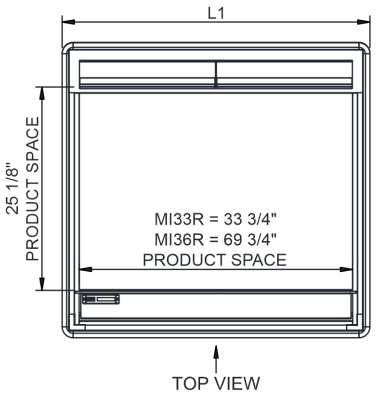

SIDE VIEW

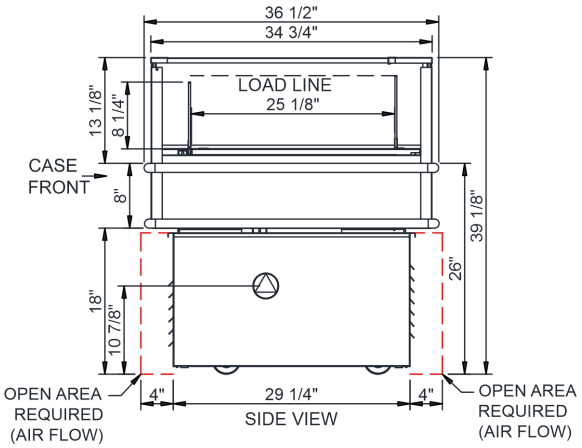

NOTE: ALL DIMENSIONS APPROXIMATE

ELECTRICAL JUNCTION BOX (SUPPLIED WITH 6" LEADS OR POWER CORD).
LOCATION OF DRAIN TUBE FOR REMOTE REF. ONLY (SUPPLIED WITH ¾" OR 1½" PVC TUBE).
REFRIGERATION LINE CONNECTION.
REMOTE FLOOR SINK & UTILITIES ACCESS AREA.
SELF-CONTAINED CASE SERVICE ACCESS AREA.
DRY CASE SERVICE ACCESS AREA.

Model Technical Specifications

Model	L"	L1"	L2"	System Circuit Volts			Phs	Freq	Amps ***	Watts	Wires	NEMA Plug	SST	Conv. Rack BTUH	Para. Rack BTUH	Est Wt
MI33R	N/A	38.13	.00	Self-Contained (R290)	Circuit #1	110-120	1	60	14.20	1,505	2+G	5-20P or L5-20P	N/A	N/A	N/A	750
MI36R	N/A	74.13	.00	Self-Contained (R290)	Circuit #1	208-240	1	60	16.00	2,795	2+G	6-20P or L6-20P	N/A	N/A	N/A	950

*** Does not include electric defrost on freezer models.

Regulatory Approvals:	
All Models	Accordance with AHRI Std 1200 ETL Listed to UL 471 & UL 60335-2-89 ETL Listed to CAN/CSA 22.2 No. 120 ETL Sanitation to NSF/ANSI 7

In Accordance with AHRI Std 1200

DOE 2017 Energy Efficiency Compliant

Important Notes:

1) Performance issues (product temperatures, water on floor, etc.) caused by adverse conditions are not covered by warranty.
2) Maximum load height is 8-1/4" up from deck.
3) Compressor air side intake and side discharge. All louvered panels cannot be blocked.
4) Do not expose unit to direct sunlight or any heat source (ovens, fryers, etc.).
5) Keep unit at least 15' from exterior doors, 10' from overhead HVAC vents, 5' from exterior windows.
6) If GFCI is required, a GFCI breaker MUST be used in lieu of a GFCI receptacle.

⚠ **WARNING:** This product can expose you to chemicals, including Urethane (Ethyl Carbamate), which are known to the State of California to cause cancer and birth defects or other reproductive harm. For more information go to www.P65Warnings.ca.gov.

Placement of Case

Consider where the display case will be positioned relative to walls, ceilings, HVAC vents, windows, and other equipment discharging warm air.

The 5′ - 10′ - 15′ Rule

Stay 5′ away from an exterior window

Direct sunlight increases the heat load on the front of the display resulting in the refrigeration system having to work harder and possible condensation on the case.

Remain 10′ away from HVAC ceiling vents

Air blowing on the front of the display interrupts the air curtain and causes product temperatures to increase.

Minimum 4″ clearance to walls & ceilings.
Refer to spec sheets & design guide for further information.

With service display cases that have a glass front, air blowing on the front glass causes condensation to develop.

Position the display 15′ away from exterior doors

Air drafts from the front exterior doors interrupt the air curtain, allowing warm air to penetrate the inside of the display, affecting product temperature.

