Technical Information

Reveal® - Heated Service Case

Structural Concepts®
DELIVERING FRESH. ALWAYS.™

DIMENSIONS / SHIPPING

Model	L"	L1"	L2"	Est Wt (lbs)
NR3655HSV	N/A	35.750	0.000	900
NR4855HSV	N/A	47.750	0.000	1,000

ELECTRICAL

Model	System Circuit Volts			Ph	Frq	Rated Load Amps	Min Cir Amps	Max OCP Amps	Watts	Wires	NEMA Plug	Amps Lights	Amps Fans	Amps Anti-Sweats	Amps Misc/Refrig/ Heat
NR3655HSV	Heat (N/A)	Circuit #1	208-240	1	60	14.25	20	20	2,809	2+G	6-20P or L6-20P	0.36	0.14	13.75	N/A
NR4855HSV	Heat (N/A)	Circuit #1	208-240	1	60	19.94	30	30	3,960	2+G	6-30P or L6-30P	0.36	0.21	19.37	N/A

REFRIGERATION

Model	Zone	Section	System	Envt	REMOTE REFRIGERATION					GLYCOL / R744 REFRIGERATION			
					SST (°F)	Conv. Rack BTUH	Para. Rack BTUH	Defrost Interval (Hrs)	Defrost Duration	Total GPM	Pressure Drop (psi)	Concent (%)	Liquid Temp (°F)

INTENDED ENVIRONMENT

Type I - Designed to operate in ambient conditions of 75°F with 55% relative humidity unless noted otherwise under Envt above.

WARMEST AVERAGE PRODUCT TEMP & INTENDED USE OF ZONES

Zone	Temp (°F)	Intended Use
1	160	Packaged / unpackaged heated products-Preheated to Warmest Avg Prod Temp.

IMPORTANT NOTES

1) ELECTRICAL NOTE: If GFCI is required, a GFCI breaker MUST be used in lieu of a GFCI receptacle
2) Glass warranty only applicable to first point of delivery.

REGULATORY

All Models	ETL Listed to UL 197 ETL Listed to CAN/CSA 22.2 No. 109 ETL Sanitation to NSF/ANSI 4

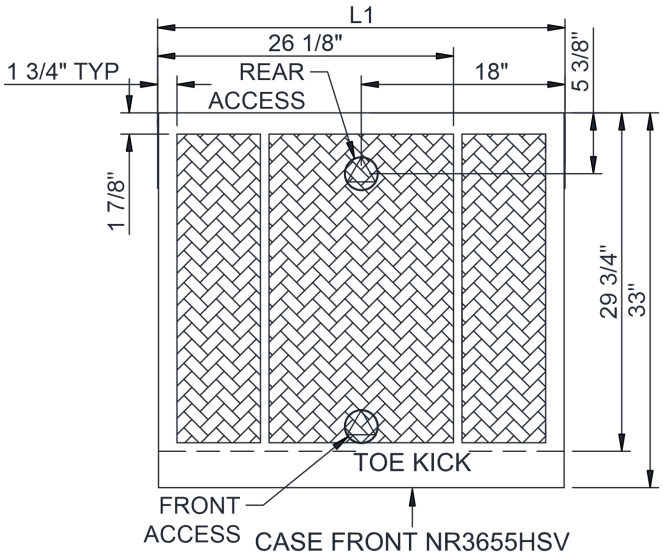

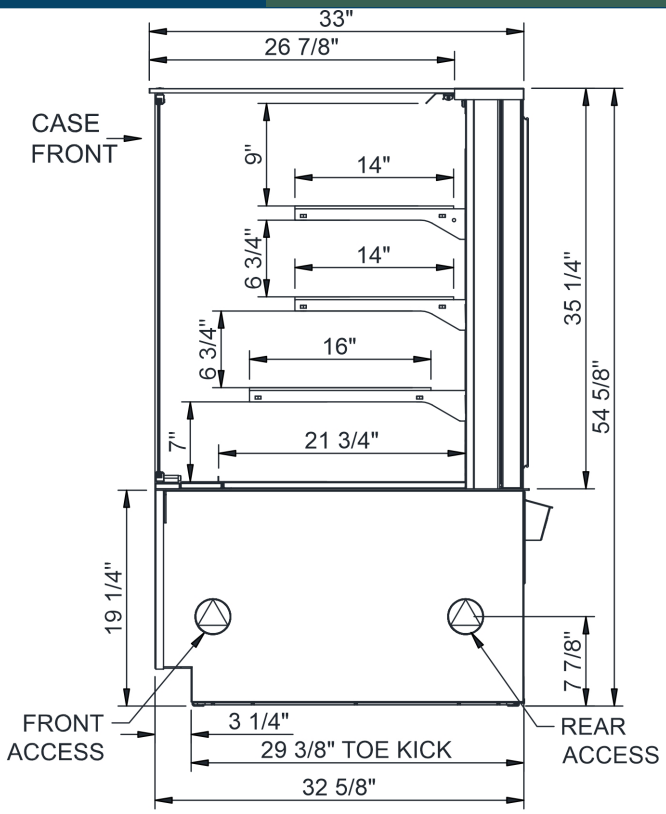

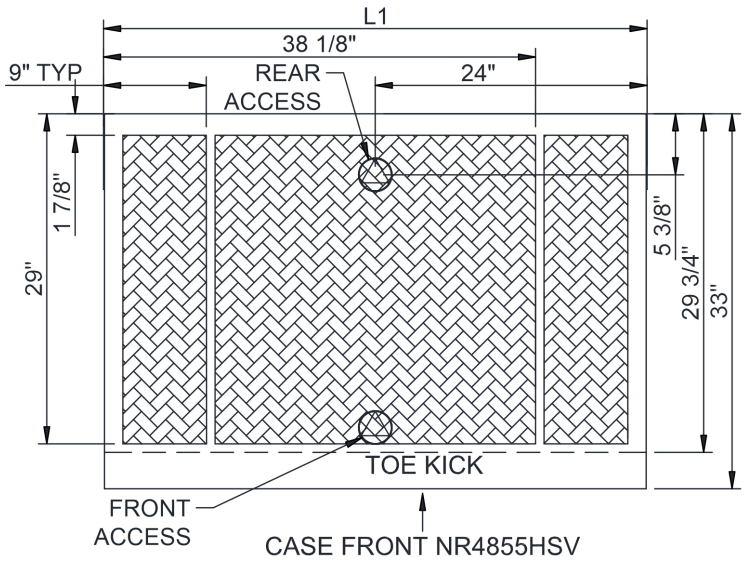

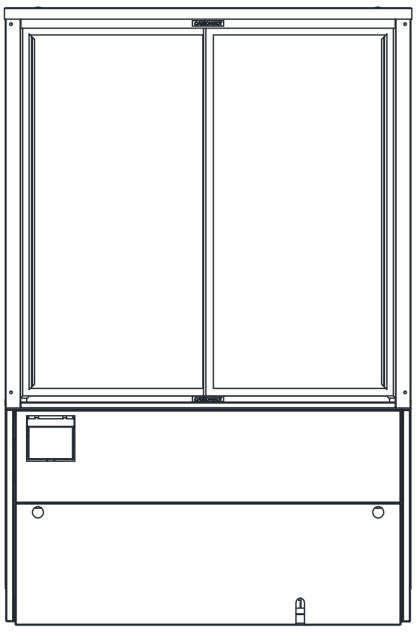

BACK VIEW

NOTE: ALL DIMENSIONS APPROXIMATE

ELECTRICAL JUNCTION BOX (SUPPLIED WITH 6" LEADS OR POWER CORD).

LOCATION OF DRAIN TUBE FOR REMOTE REF. ONLY (SUPPLIED WITH $^{3}/_{4}$" OR $1^{1}/_{2}$" PVC TUBE).

REFRIGERATION LINE CONNECTION.

REMOTE FLOOR SINK & UTILITIES ACCESS AREA.

SELF-CONTAINED CASE SERVICE ACCESS AREA.

DRY CASE SERVICE ACCESS AREA.