Technical Information

Reveal® - Non-Refrigerated Self-Service Slide In Counter Case

Structural Concepts®
DELIVERING FRESH. ALWAYS.™

DIMENSIONS / SHIPPING

Model	L"	L1"	L2"	Est Wt (lbs)
NE3635DSSV	N/A	35.750	0.000	750
NE4835DSSV	N/A	47.750	0.000	850

ELECTRICAL

Model	System Circuit Volts			Ph	Frq	Rated Load Amps	Min Cir Amps	Max OCP Amps	Watts	Wires	NEMA Plug	Amps Lights	Amps Fans	Amps Anti-Sweats	Amps Misc/Refrig/ Heat
NE3635DSSV	Ambient/Lights (N/A)	Circuit #1	110-120	1	60	0.70	15	15	15	2+G	5-15P or L5-15P	0.70	N/A	N/A	N/A
NE4835DSSV	Ambient/Lights (N/A)	Circuit #1	110-120	1	60	0.70	15	15	22	2+G	5-15P or L5-15P	0.70	N/A	N/A	N/A

REFRIGERATION

Model	Zone	Section	System	Envt	REMOTE REFRIGERATION					GLYCOL / R744 REFRIGERATION			
					SST (°F)	Conv. Rack BTUH	Para. Rack BTUH	Defrost Interval (Hrs)	Defrost Duration	Total GPM	Pressure Drop (psi)	Concent (%)	Liquid Temp (°F)
NE3635DSSV	All	Ambient	Ambient/Lights-N/A	Type II	N/A	N/A	N/A	N/A	N/A	N/A	N/A	N/A	N/A
NE4835DSSV	All	Ambient	Ambient/Lights-N/A	Type II	N/A	N/A	N/A	N/A	N/A	N/A	N/A	N/A	N/A

INTENDED ENVIRONMENT

Type I - Designed to operate in ambient conditions of 75°F with 55% relative humidity unless noted otherwise under Envt above.

WARMEST AVERAGE PRODUCT TEMP & INTENDED USE OF ZONES

Zone	Temp (°F)	Intended Use
1	Ambient	Packaged non-refrigerated products

REGULATORY

All Models	ETL Listed to UL 65 ETL Sanitation to NSF/ANSI 2

IMPORTANT NOTES

1) ELECTRICAL NOTE: If GFCI is required, a GFCI breaker MUST be used in lieu of a GFCI receptacle
2) 19.25" minimum space required beneath counter surface.
3) Glass warranty only applicable to first point of delivery.

Technical Information

Reveal® - Non-Refrigerated Self-Service Slide In Counter Case

Structural Concepts®
DELIVERING FRESH. ALWAYS.™

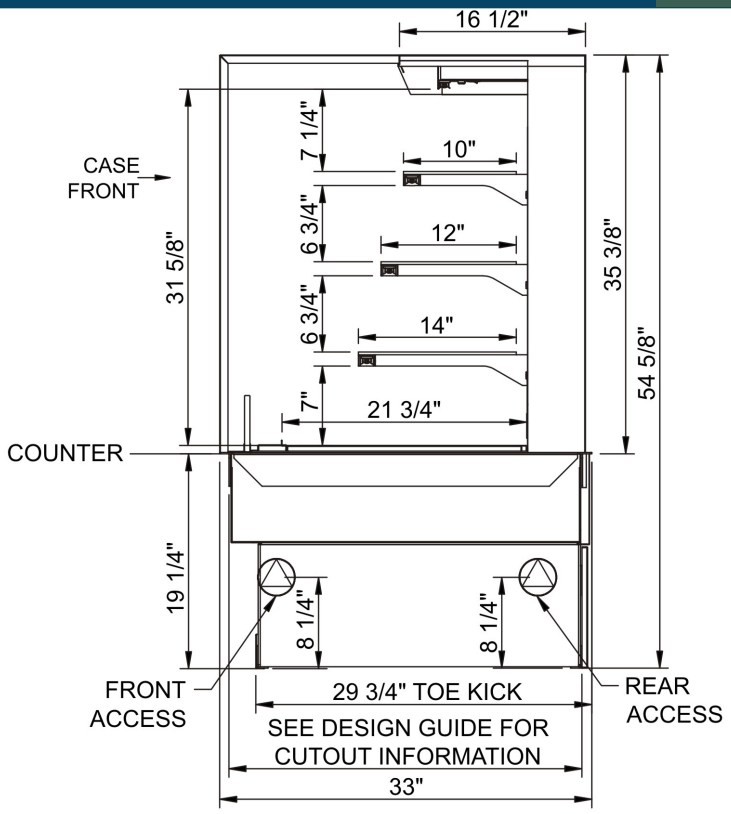

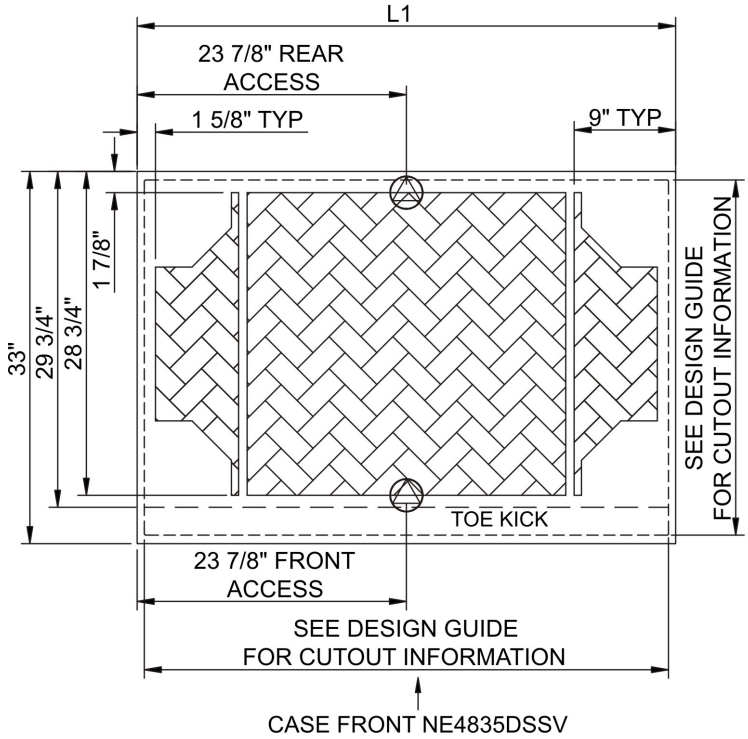

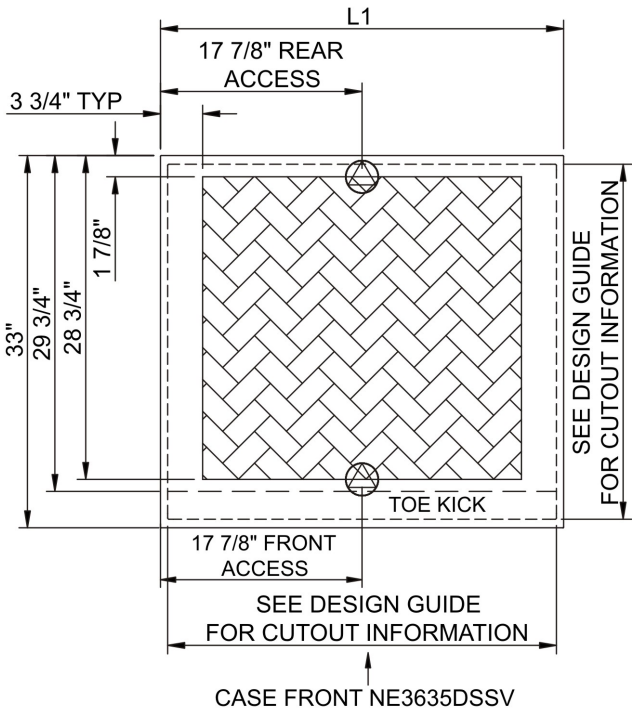

NOTE: ALL DIMENSIONS APPROXIMATE

- ELECTRICAL JUNCTION BOX (SUPPLIED WITH 6" LEADS OR POWER CORD).
- LOCATION OF DRAIN TUBE FOR REMOTE REF. ONLY (SUPPLIED WITH $\frac{3}{4}$" OR $1\frac{1}{2}$" PVC TUBE).
- REFRIGERATION LINE CONNECTION.
- REMOTE FLOOR SINK & UTILITIES ACCESS AREA.
- SELF-CONTAINED CASE SERVICE ACCESS AREA.
- DRY CASE SERVICE ACCESS AREA.