Technical Information

Fusion - GLDS 52"H Refrigerated Service Case Remote

Structural Concepts®
DELIVERING FRESH. ALWAYS.™

DIMENSIONS / SHIPPING

Model	L"	L1"	L2"	Est Wt (lbs)
GLDS4R	48.750	51.000	3.500	1,050
GLDS5R	60.625	62.875	3.500	1,150
GLDS6R	73.125	75.375	3.500	1,250

ELECTRICAL

Model	System Circuit Volts			Ph	Frq	Rated Load Amps	Min Cir Amps	Max OCP Amps	Watts	Wires	NEMA Plug	Amps Lights	Amps Fans	Amps Anti-Sweats	Amps Misc/Refrig/ Heat
GLDS4R	Remote (DX)	Circuit #1	110-120	1	60	1.53	15	15	106	2+G	Leads Multiple	0.53	0.30	0.70	N/A
GLDS5R	Remote (GLYCOL)	Circuit #1	110-120	1	60	1.99	15	15	168	2+G	Leads Multiple	0.69	0.60	0.70	N/A
	Remote (DX)	Circuit #1	110-120	1	60	2.02	15	15	83	2+G	Leads Multiple	0.70	0.62	0.70	N/A
GLDS6R	Remote (DX)	Circuit #1	110-120	1	60	2.29	15	15	80	2+G	Leads Multiple	0.70	0.60	0.99	N/A
	Remote (GLYCOL)	Circuit #1	110-120	1	60	2.29	15	15	80	2+G	Leads Multiple	0.70	0.60	0.99	N/A

REFRIGERATION

Model	Zone	Section	System	Envt	REMOTE REFRIGERATION					GLYCOL / R744 REFRIGERATION			
					SST (°F)	Conv. Rack BTUH	Para. Rack BTUH	Defrost Interval (Hrs)	Defrost Duration	Total GPM	Pressure Drop (psi)	Concent (%)	Liquid Temp (°F)
GLDS4R	All	Main	Remote-DX	Type I	20	1,179	1,092	4.00	30.00	N/A	N/A	N/A	N/A
GLDS5R	All	Main	Remote-Glycol	Type I	N/A	1,566	1,450	4.00	30.00	1.00	2.42	35%	20.00
	All	Main	Remote-DX	Type I	20	1,568	1,452	4.00	30.00	N/A	N/A	N/A	N/A
GLDS6R	All	Main	Remote-DX	Type I	20	1,771	1,640	4.00	30.00	N/A	N/A	N/A	N/A
	All	Main	Remote-Glycol	Type I	N/A	1,771	1,640	4.00	45.00	0.60	1.42	35%	20.00

INTENDED ENVIRONMENT

Type I - Designed to operate in ambient conditions of 75°F with 55% relative humidity unless noted otherwise under Envt above.

WARMEST AVERAGE PRODUCT TEMP & INTENDED USE OF ZONES

Zone	Temp (°F)	Intended Use
1	40	Unpackaged refrigerated products-Prechilled to Warmest Avg Prod Temp.

IMPORTANT NOTES

1) REMOTE REFRIGERATION NOTE: Condensing unit not included, floor drain required.
2) ELECTRICAL NOTE: If GFCI is required, a GFCI breaker MUST be used in lieu of a GFCI receptacle.
3) 50" minimum door entry clearance required (without shipping skid).
4) Units must be shimmed during installation to ensure the unit is level and plumb.

REGULATORY

All Models	Accordance with AHRI Std 1200 ETL Listed to UL 471 ETL Listed to CAN/CSA 22.2 No. 120 ETL Sanitation to NSF/ANSI 7

In Accordance with
AHRI Std 1200

Technical Information

Fusion - GLDS 52"H Refrigerated Service Case Remote

Structural Concepts®
DELIVERING FRESH. ALWAYS.™

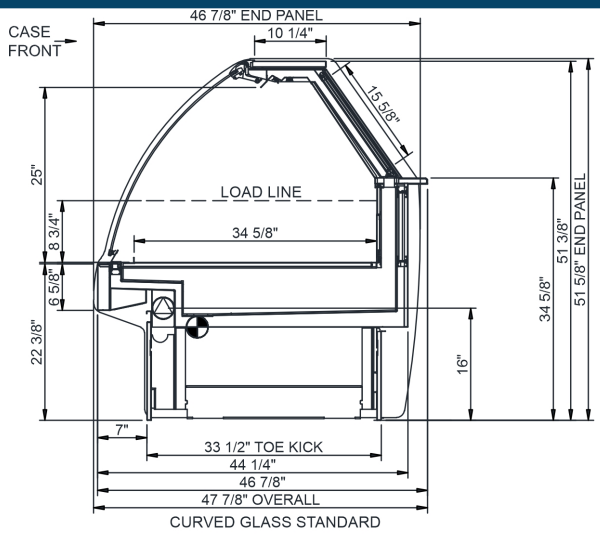

CURVED GLASS STANDARD

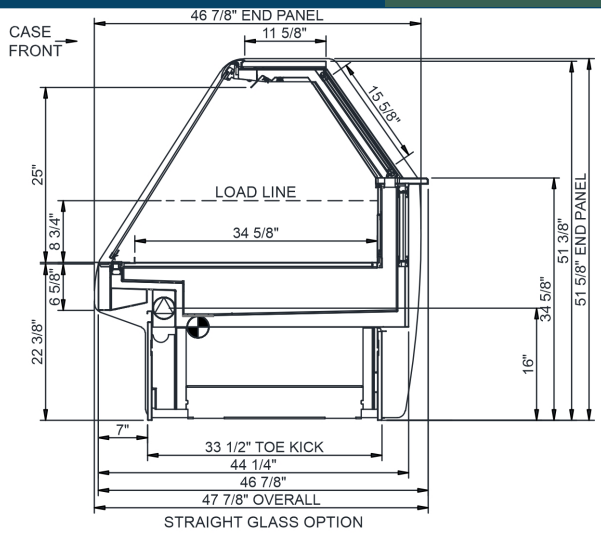

STRAIGHT GLASS OPTION

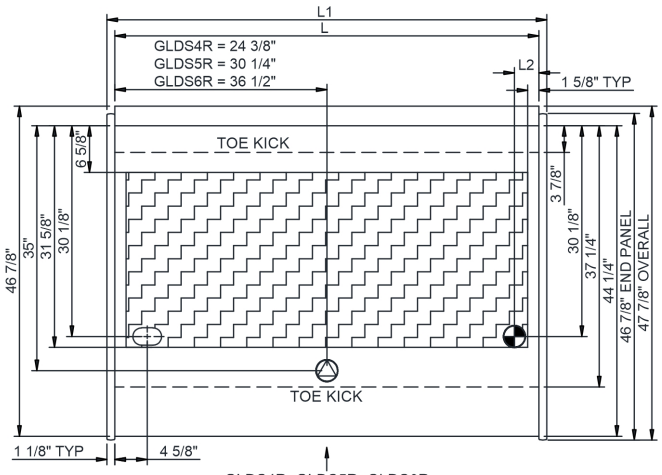

GLDS4R, GLDS5R, GLDS6R
CASE FRONT

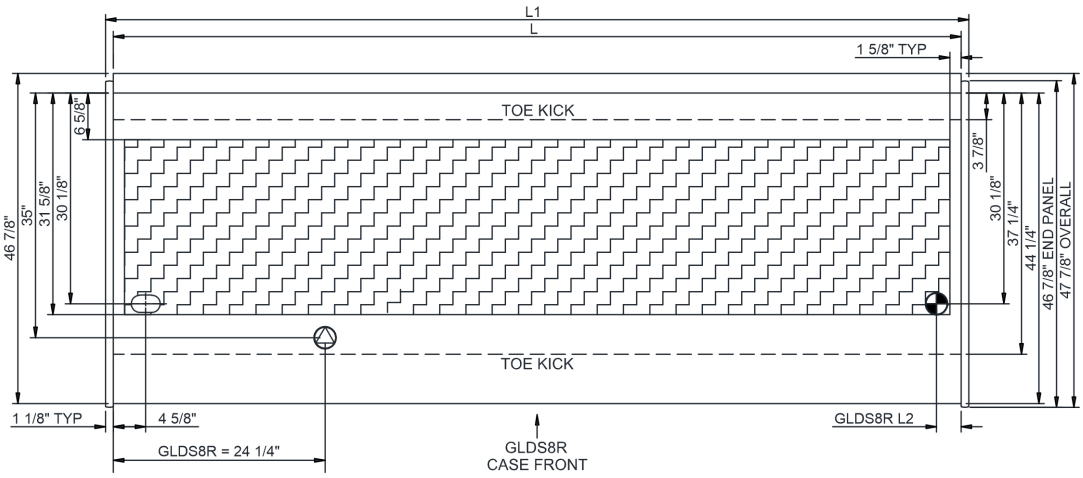

GLDS8R
CASE FRONT

NOTE: ALL DIMENSIONS APPROXIMATE

- ELECTRICAL JUNCTION BOX (SUPPLIED WITH 6" LEADS OR POWER CORD).
- LOCATION OF DRAIN TUBE FOR REMOTE REF. ONLY (SUPPLIED WITH $\frac{3}{4}$" OR $1\frac{1}{2}$" PVC TUBE).
- REFRIGERATION LINE CONNECTION.
- REMOTE FLOOR SINK & UTILITIES ACCESS AREA.
- SELF-CONTAINED CASE SERVICE ACCESS AREA.
- DRY CASE SERVICE ACCESS AREA.