Technical Information

Fusion - GLDS 52"H Refrigerated Service Case Self-Contained

Structural Concepts®
DELIVERING FRESH. ALWAYS.™

DIMENSIONS / SHIPPING

Model	L"	L1"	L2"	Est Wt (lbs)
GLDS4R	48.750	51.000	3.500	1,050
GLDS5R	60.625	62.875	3.500	1,150
GLDS6R	73.125	75.375	3.500	1,250

ELECTRICAL

Model	System Circuit Volts			Ph	Frq	Rated Load Amps	Min Cir Amps	Max OCP Amps	Watts	Wires	NEMA Plug	Amps Lights	Amps Fans	Amps Anti-Sweats	Amps Misc/Refrig/ Heat
GLDS4R	Self-Contained (R290)-Type I Env	Circuit #1	110-120	1	60	14.61	20	20	1,479	2+G	5-20P or L5-20P	N/A	0.45	3.96	10.20
GLDS5R	Self-Contained (R290)-Type I Env	Circuit #1	110-120	1	60	15.06	20	20	1,513	2+G	5-20P or L5-20P	N/A	0.90	3.96	10.20
GLDS6R	Self-Contained (R290)-Type I Env	Circuit #1	110-120	1	60	15.06	20	20	1,519	2+G	5-20P or L5-20P	N/A	0.90	3.96	10.20

REFRIGERATION

Model	Zone	Section	System	Envt	REMOTE REFRIGERATION					GLYCOL / R744 REFRIGERATION			
					SST (°F)	Conv. Rack BTUH	Para. Rack BTUH	Defrost Interval (Hrs)	Defrost Duration	Total GPM	Pressure Drop (psi)	Concent (%)	Liquid Temp (°F)
GLDS4R	All	Main	Self-Contained-R290-Type I Env	Type I	N/A	N/A	N/A	N/A	N/A	N/A	N/A	N/A	N/A
GLDS5R	All	Main	Self-Contained-R290-Type I Env	Type I	N/A	N/A	N/A	N/A	N/A	N/A	N/A	N/A	N/A
GLDS6R	All	Main	Self-Contained-R290-Type I Env	Type I	N/A	N/A	N/A	N/A	N/A	N/A	N/A	N/A	N/A

INTENDED ENVIRONMENT

Type I - Designed to operate in ambient conditions of 75°F with 55% relative humidity unless noted otherwise under Envt above.

WARMEST AVERAGE PRODUCT TEMP & INTENDED USE OF ZONES

Zone	Temp (°F)	Intended Use
1	40	Unpackaged refrigerated products-Prechilled to Warmest Avg Prod Temp.

IMPORTANT NOTES

1) ELECTRICAL NOTE: If GFCI is required, a GFCI breaker MUST be used in lieu of a GFCI receptacle.
2) 50" minimum door entry clearance required (without shipping skid).
3) Units must be shimmed during installation to ensure the unit is level and plumb.

REGULATORY

All Models	Accordance with AHRI Std 1200 ETL Listed to UL 471 ETL Listed to CAN/CSA 22.2 No. 120 ETL Sanitation to NSF/ANSI 7

In Accordance with AHRI Std 1200

Technical Information

Fusion - GLDS 52"H Refrigerated Service Case Self-Contained

Structural Concepts®
DELIVERING FRESH. ALWAYS.™

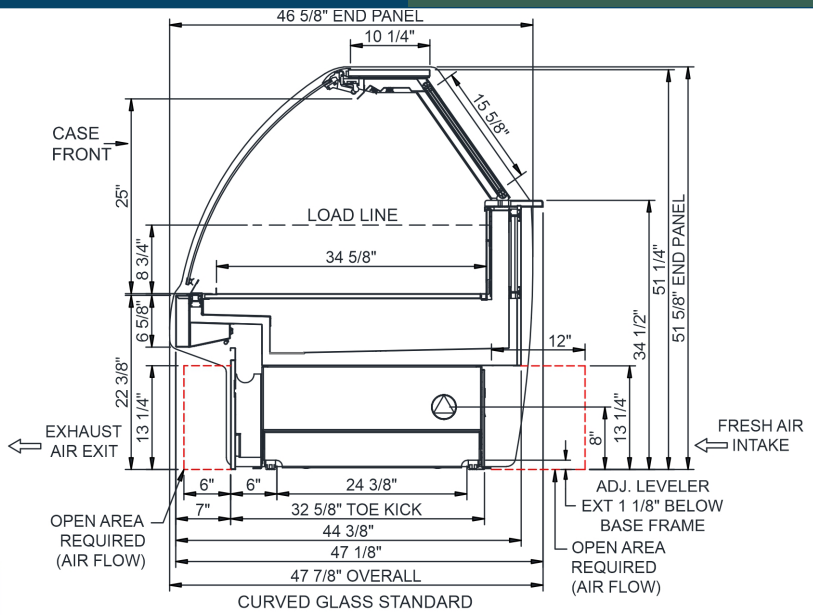

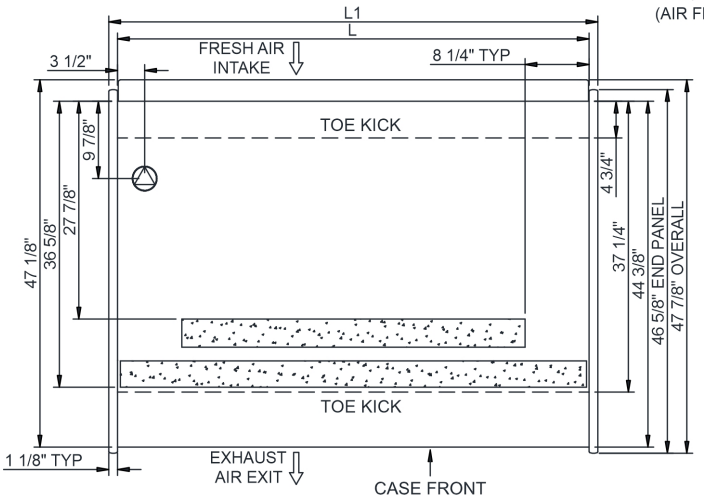

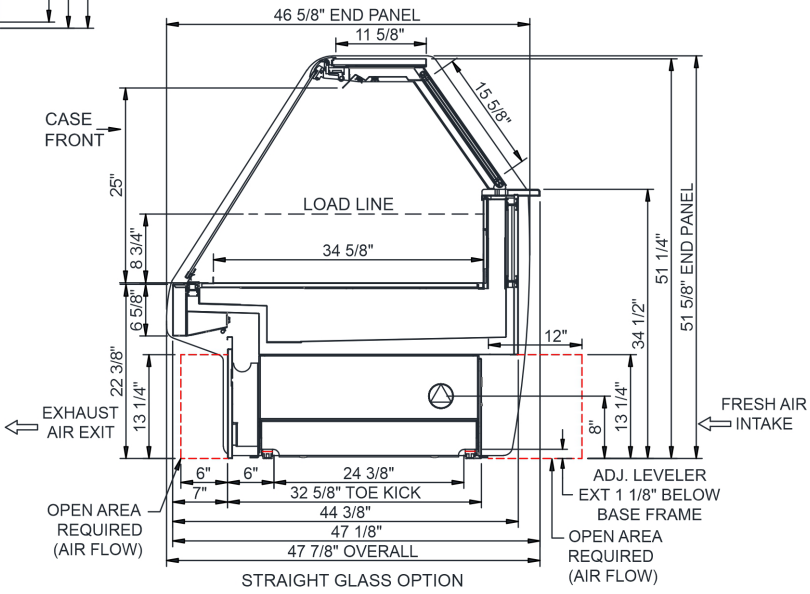

NOTE: ALL DIMENSIONS APPROXIMATE

- ELECTRICAL JUNCTION BOX (SUPPLIED WITH 6" LEADS OR POWER CORD).
- LOCATION OF DRAIN TUBE FOR REMOTE REF. ONLY (SUPPLIED WITH $^{3}/_{4}$" OR $1^{1}/_{2}$" PVC TUBE).
- REFRIGERATION LINE CONNECTION.
- REMOTE FLOOR SINK & UTILITIES ACCESS AREA.
- SELF-CONTAINED CASE SERVICE ACCESS AREA.
- DRY CASE SERVICE ACCESS AREA.