Structural Concepts
DELIVERING FRESH. ALWAYS.™

SIDE SECTION VIEW

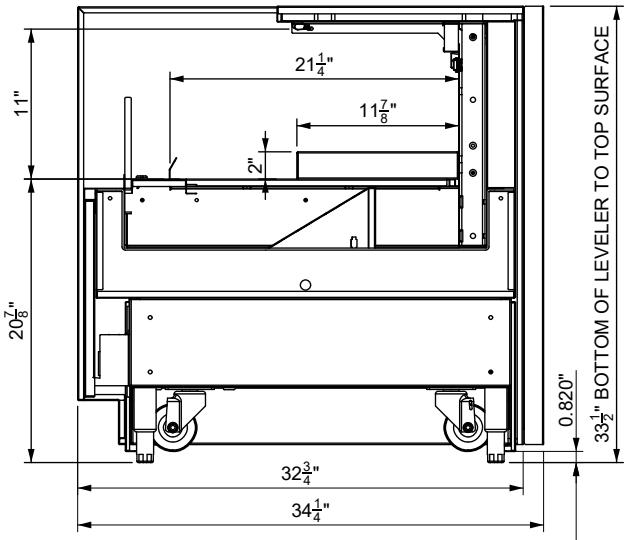

CURRENT MODEL

LEVELER FULLY EXTENDED.
RANGE 0" TO 0.82"

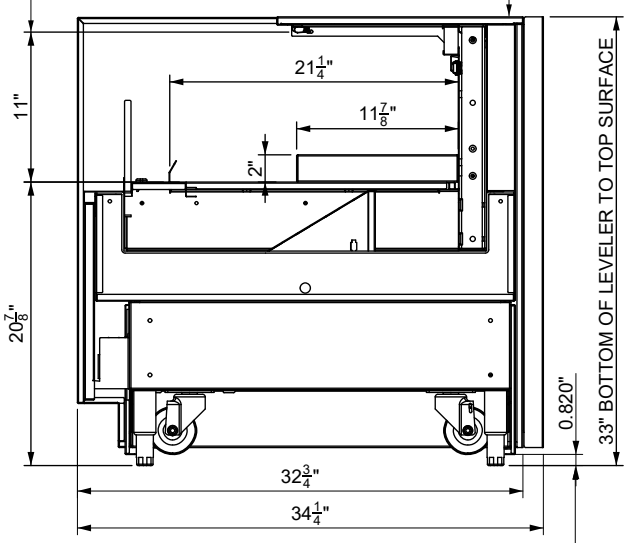

REDUCED HEIGHT MODEL

LEVELER FULLY EXTENDED.
RANGE 0" TO 0.82"

THESE DESIGNS AND SPECIFICATIONS ARE CONFIDENTIAL AND PROPRIETARY TO STRUCTURAL CONCEPTS CORPORATION. NO RIGHTS TO REPRODUCE AND/OR DISTRIBUTE INFORMATION PERTAINING TO THESE DESIGNS IS ALLOWED WITHOUT WRITTEN PERMISSION FROM STRUCTURAL CONCEPTS CORPORATION.

DRAWINGS NOT TO SCALE. ALL DIMENSIONS APPROXIMATE.